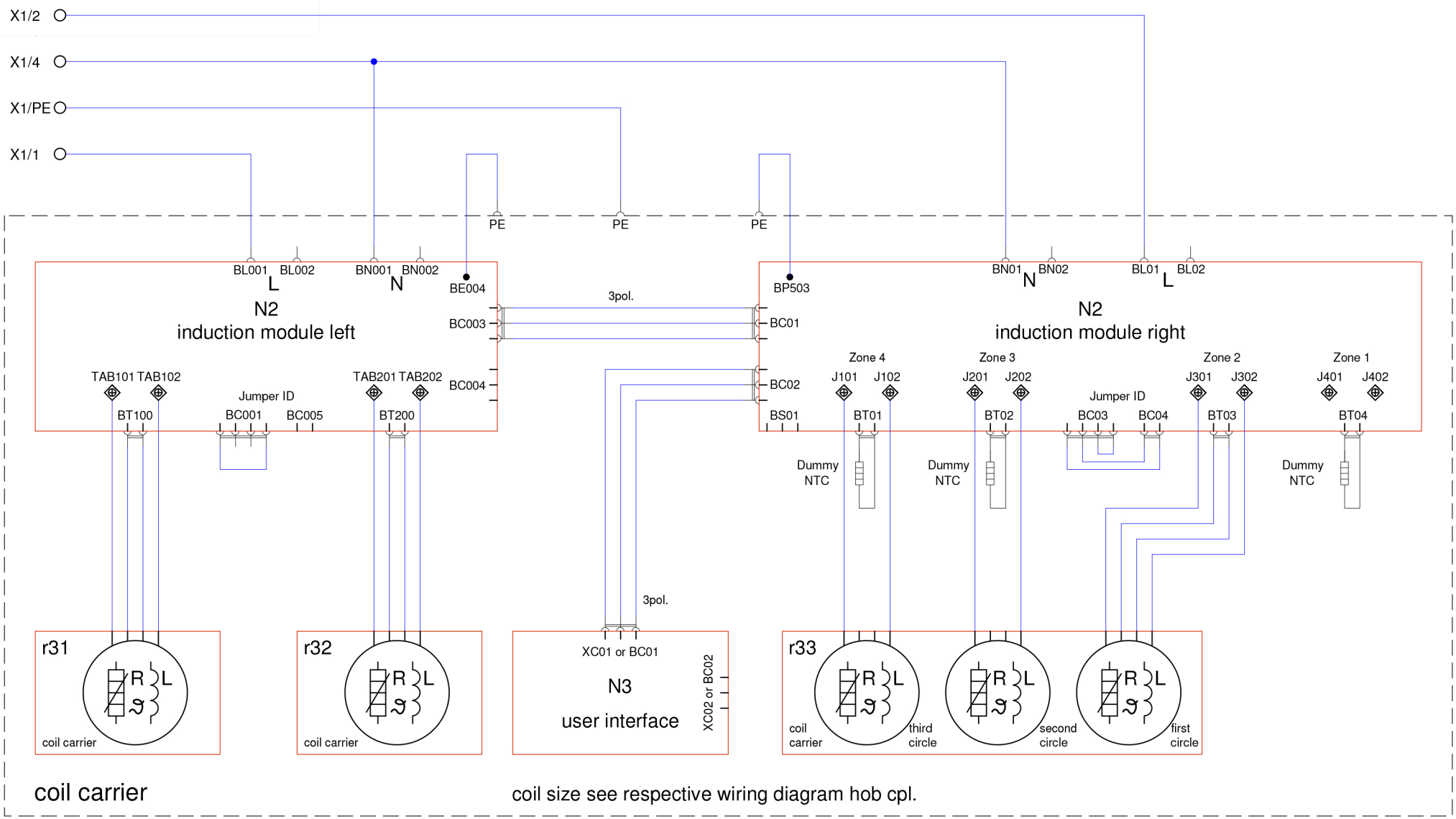

coil carrier

coil size see respective wiring diagram hob cpl.

A12139701