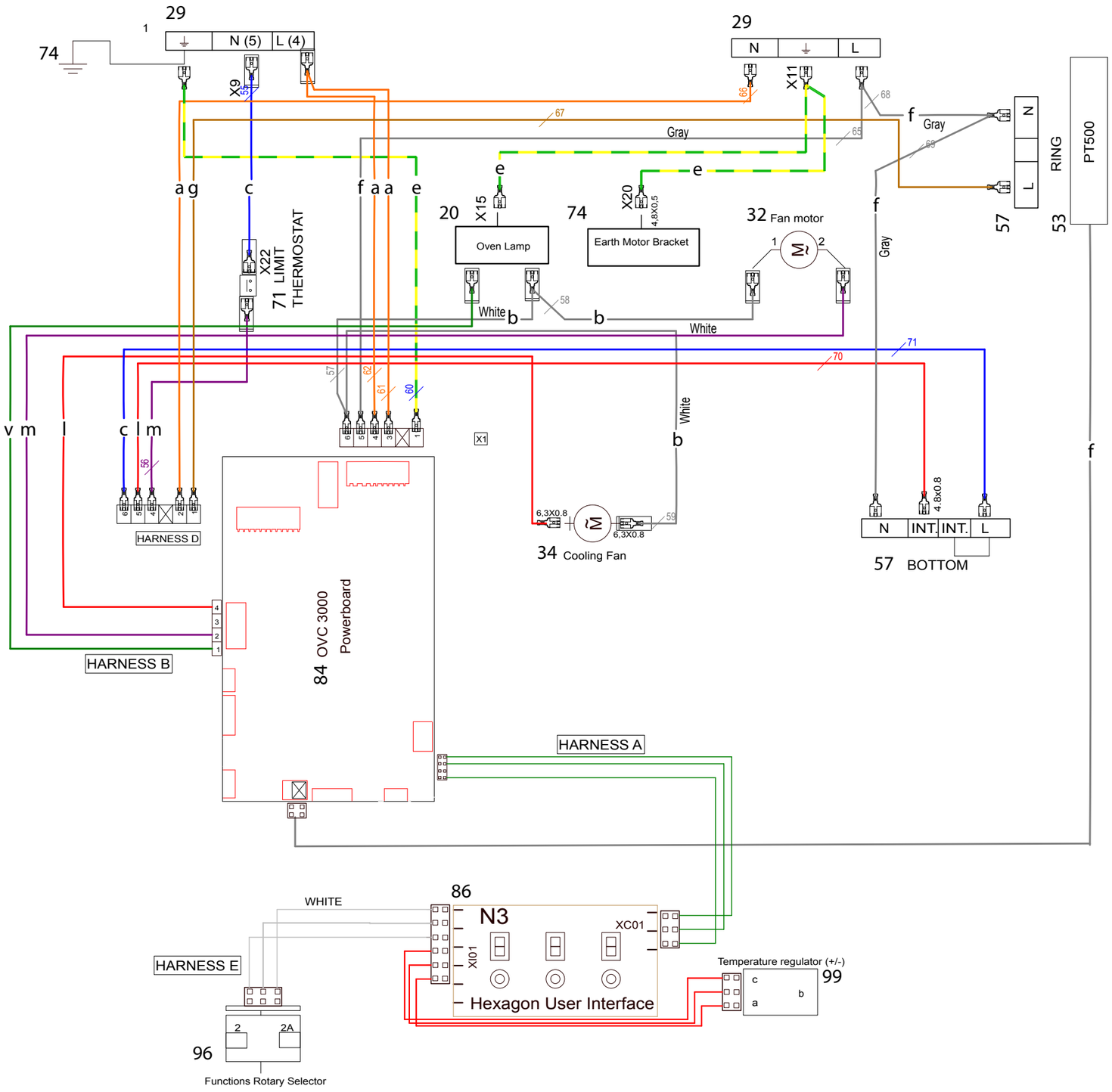
29
74
N (5)
L (4)
X9
29
N
L
X11
Gray
Gray
RING
PT500
57
53
a g
c
f a a
e
e
X15
20
Oven Lamp
74
X20
4.8X0.5
Earth Motor Bracket
32 Fan motor
X22
71 LIMIT THERMOSTAT
White
b
b
White
f
Gray
v m
l
c l m
HARNESS D
HARNESS B
84 OVC 3000 Powerboard
X1
6,3X0.8
6,3X0.8
34 Cooling Fan
b
White
4.8x0.8
N
INT.
INT.
L
57 BOTTOM
f
HARNESS A
WHITE
86
N3
XC01
XI01
Hexagon User Interface
HARNESS E
Temperature regulator (+/-)
99
c
b
a
2
2A
96
Functions Rotary Selector

A06880201