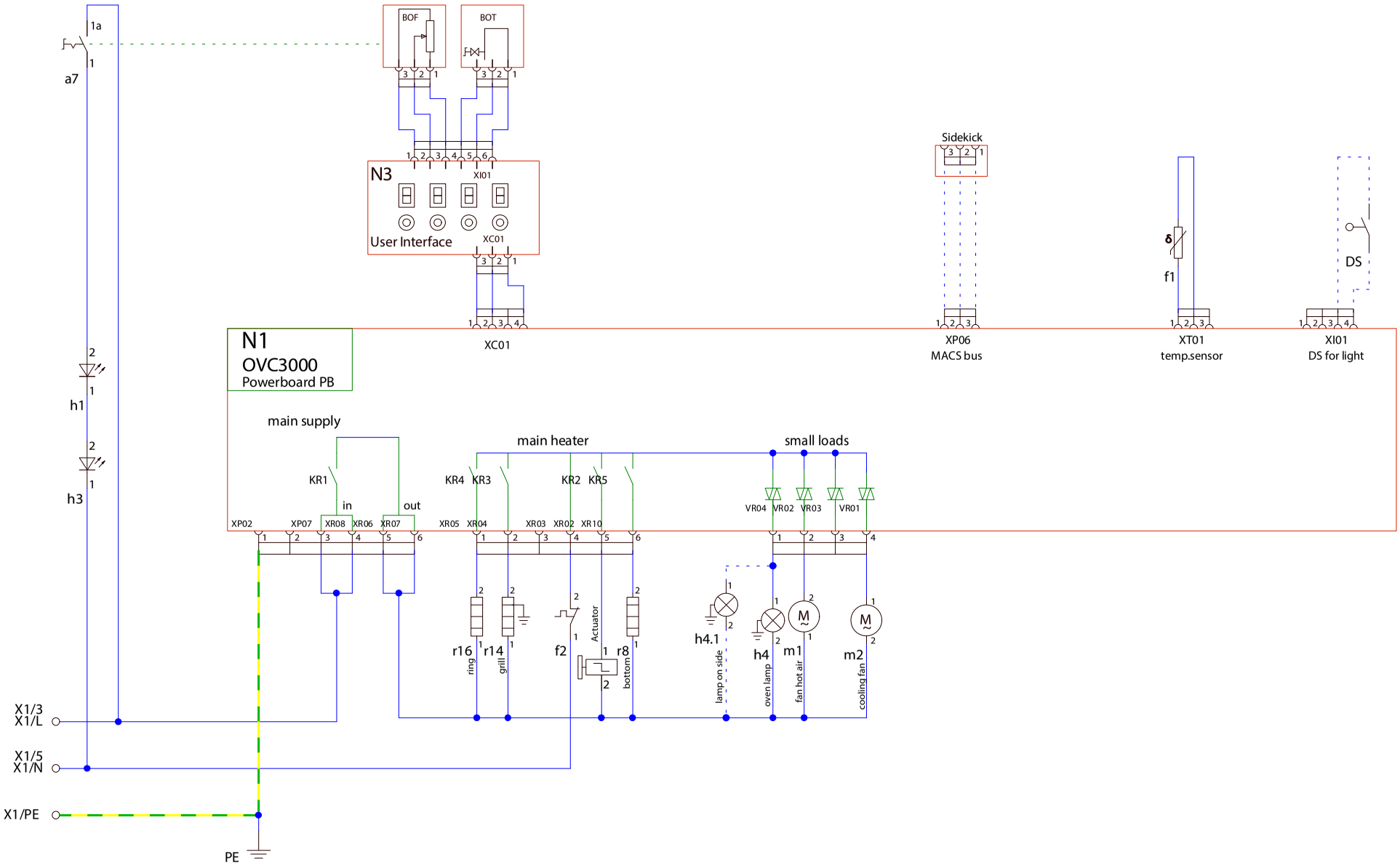
1a
a7
BOF
BOT
N3
XI01
User Interface
XC01
Sidekick
f1
DS
N1
OVC3000
Powerboard PB
XC01
XP06
MACS bus
XT01
temp.sensor
XI01
DS for light
h1
h3
main supply
main heater
small loads
KR1
in
out
KR4
KR3
KR2
KR5
VR04
VR02
VR03
VR01
XP02
XP07
XR08
XR06
XR07
XR05
XR04
XR03
XR02
XR10
r16
ring
r14
grill
f2
Actuator
r8
bottom
h4.1
lamp on side
h4
oven lamp
m1
fan hot air
m2
cooling fan
X1/3
X1/L
X1/5
X1/N
X1/PE
PE

A12381601