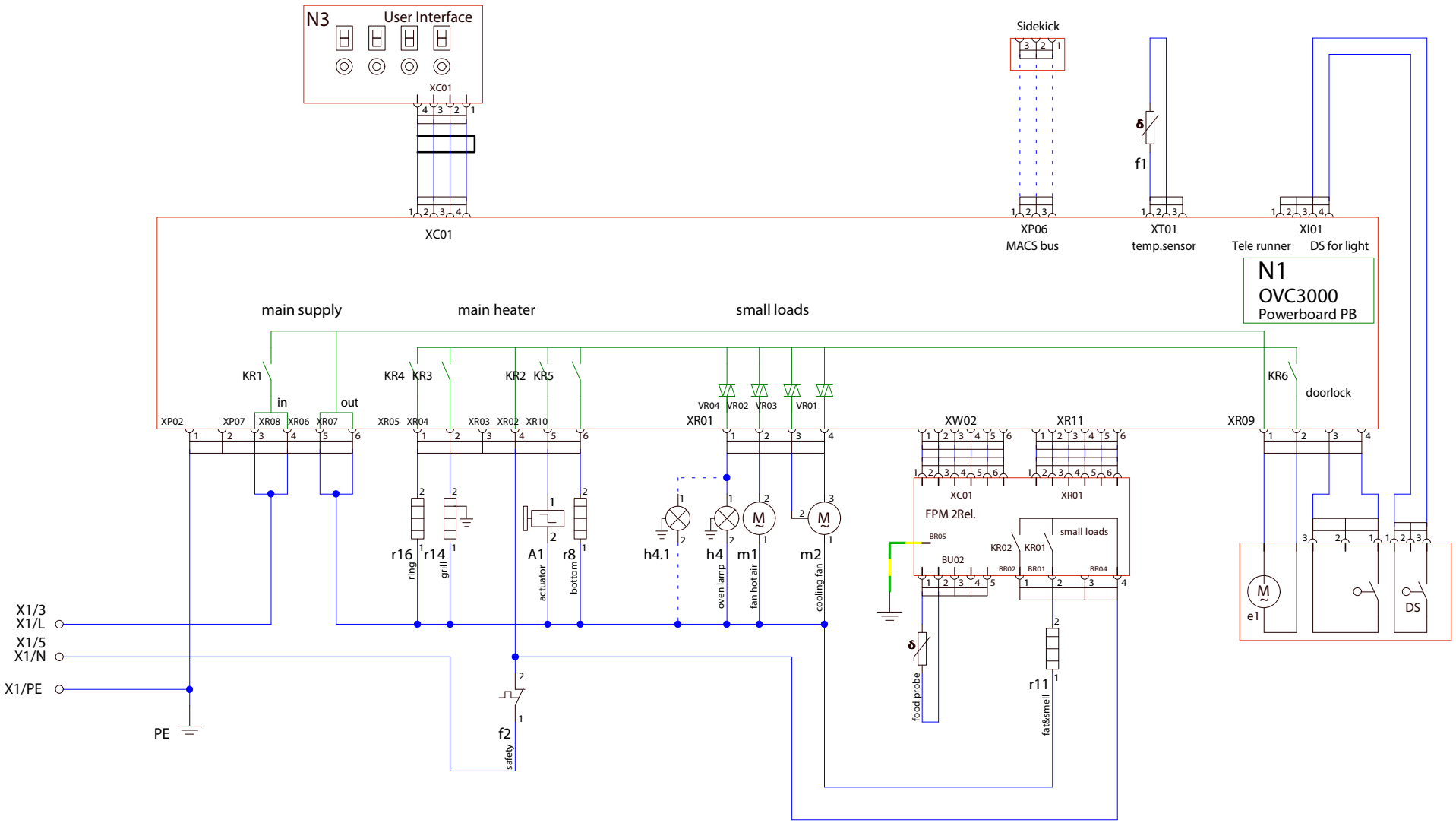
N3
User Interface
XC01
Sidekick
f1
XC01
XP06
MACS bus
XT01
temp.sensor
XI01
Tele runner
DS for light
N1
OVC3000
Powerboard PB
main supply
main heater
small loads
KR1
in
out
KR4
KR3
KR2
KR5
KR6
doorlock
VR04
VR02
VR03
VR01
XP02
XP07
XR08
XR06
XR07
XR05
XR04
XR03
XR02
XR10
XR01
XW02
XR11
XR09
XC01
XR01
FPM 2Rel.
small loads
BR05
BU02
KR02
KR01
BR02
BR01
BR04
r16
ring
r14
grill
A1
actuator
r8
bottom
h4.1
h4
oven lamp
m1
fan hot air
m2
cooling fan
food probe
r11
fat&smell
f2
safety
e1
DS
X1/3
X1/L
X1/5
X1/N
X1/PE
PE

A08867201