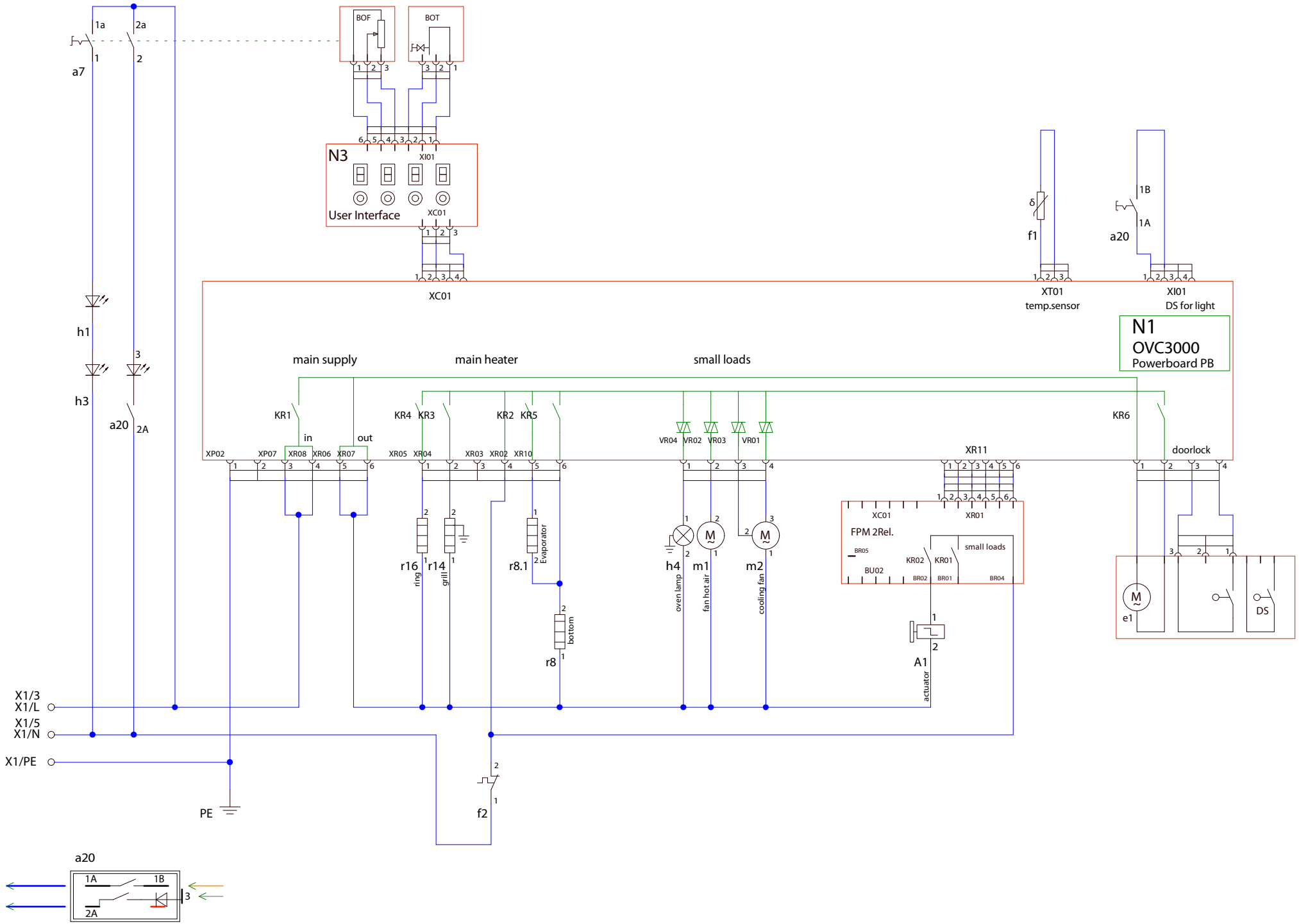
BOF
BOT
N3
XI01
User Interface
XC01
a7
1a
2a
h1
h3
a20
2A
f1
XT01
temp.sensor
1B
1A
XI01
DS for light
N1
OVC3000
Powerboard PB
main supply
main heater
small loads
KR1
KR4
KR3
KR2
KR5
KR6
in
out
XP02
XP07
XR08
XR06
XR07
XR05
XR04
XR03
XR02
XR10
VR04
VR02
VR03
VR01
XR11
doorlock
r16
ring
r14
grill
r8.1
Evaporator
r8
bottom
h4
oven lamp
m1
fan hot air
m2
cooling fan
FPM 2Rel.
small loads
KR02
KR01
BU02
A1
actuator
e1
DS
X1/3
X1/L
X1/5
X1/N
X1/PE
PE
f2
a20
1A
1B
2A

A11262301