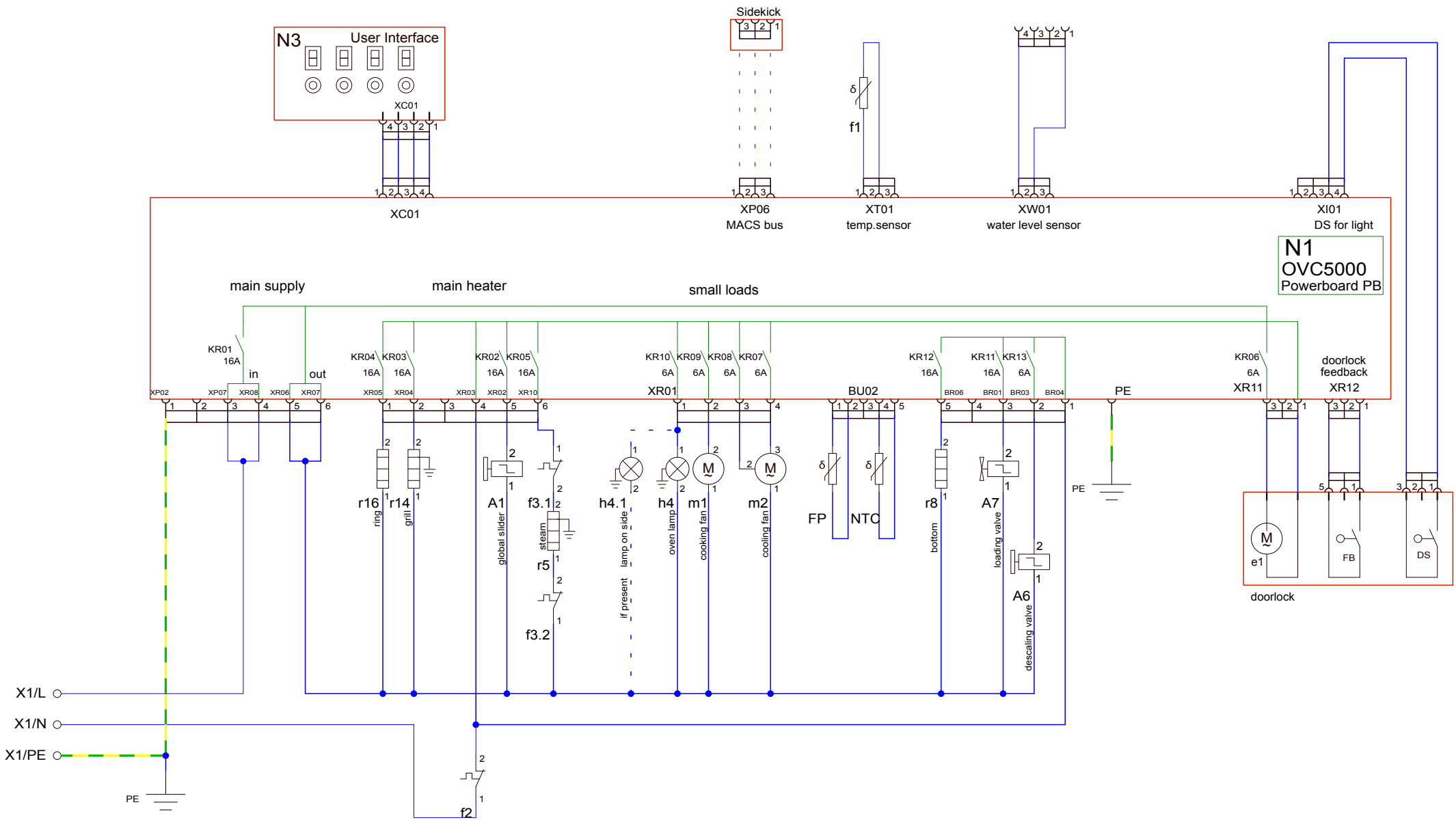
N3
User Interface
XC01
XC01
Sidekick
XP06
MACS bus
f1
XT01
temp.sensor
XW01
water level sensor
XI01
DS for light
N1
OVC5000
Powerboard PB
main supply
main heater
small loads
KR01
16A
in
out
KR04
16A
KR03
16A
KR02
16A
KR05
16A
KR10
6A
KR09
6A
KR08
6A
KR07
6A
KR12
16A
KR11
16A
KR13
6A
KR06
6A
XR01
BU02
PE
XR11
doorlock
feedback
XR12
r16
ring
r14
grill
A1
global slider
f3.1
steam
r5
f3.2
h4.1
lamp on side
if present
h4
oven lamp
m1
cooking fan
m2
cooling fan
FP
NTC
r8
bottom
A7
loading valve
A6
descaling valve
e1
doorlock
FB
DS
X1/L
X1/N
X1/PE
PE
f2

A05368601