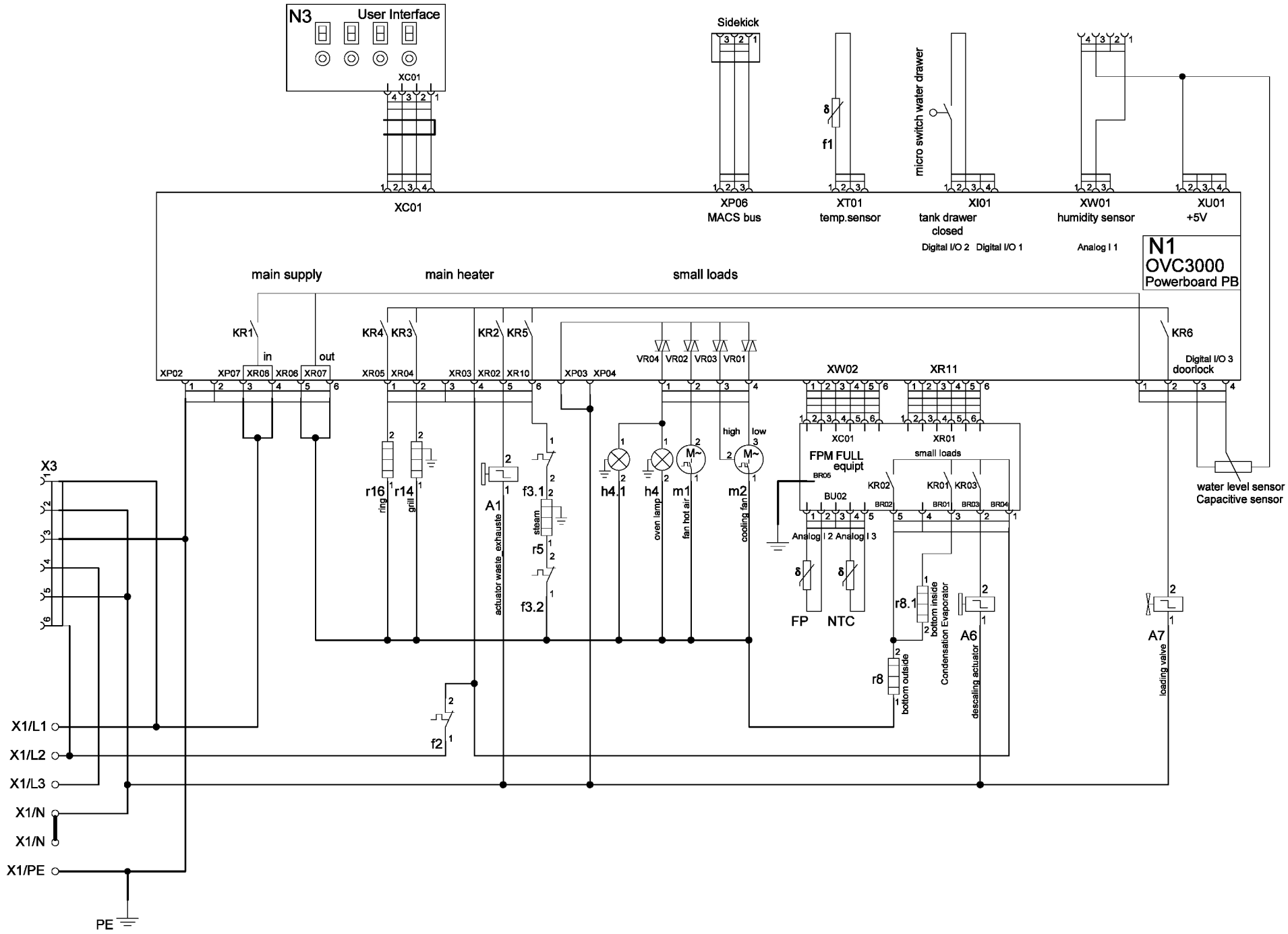
N3
User Interface
XC01
Sidekick
f1
micro switch water drawer
XC01
XP06
MACS bus
XT01
temp.sensor
XI01
tank drawer
closed
Digital I/O 2 Digital I/O 1
XW01
humidity sensor
Analog I 1
XU01
+5V
N1
OVC3000
Powerboard PB
main supply
main heater
small loads
KR1
in
out
KR4 KR3
KR2 KR5
KR6
Digital I/O 3
doorlock
VR04 VR02 VR03 VR01
XP02 XP07 XR08 XR06 XR07 XR05 XR04 XR03 XR02 XR10 XP03 XP04
XW02
XR11
XC01
XR01
FPM FULL
equipt
small loads
BR05
BU02
KR02 KR01 KR03
BR02 BR01 BR03 BR04
Analog I 2 Analog I 3
high low
r16
ring
r14
grill
A1
actuator waste_exhaustе
f3.1
steam
r5
f3.2
h4.1
h4
oven lamp
m1
fan hot air
m2
cooling fan
FP
NTC
r8.1
bottom inside
Condensation Evaporator
A6
descaling actuator
r8
bottom outside
A7
loading valve
water level sensor
Capacitive sensor
f2
X3
X1/L1
X1/L2
X1/L3
X1/N
X1/N
X1/PE
PE

A00925301