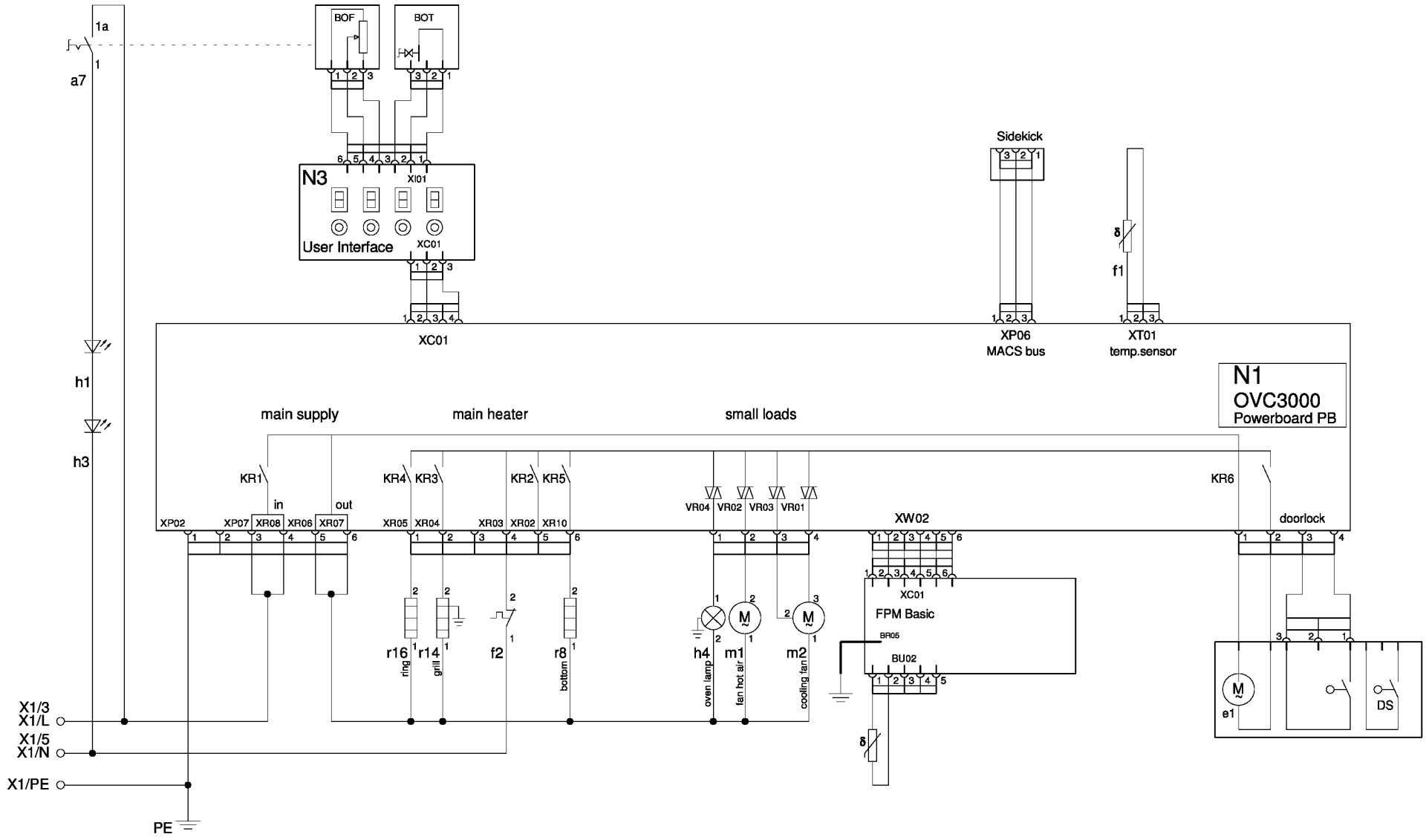
1a
a7
BOF
BOT
N3
XI01
User Interface
XC01
Sidekick
XP06
MACS bus
f1
XT01
temp.sensor
N1
OVC3000
Powerboard PB
h1
h3
main supply
main heater
small loads
KR1
KR4
KR3
KR2
KR5
KR6
in
out
XP02
XP07
XR08
XR06
XR07
XR05
XR04
XR03
XR02
XR10
VR04
VR02
VR03
VR01
XW02
doorlock
r16
ring
r14
grill
f2
r8
bottom
h4
oven lamp
m1
fan hot air
m2
cooling fan
FPM Basic
BR05
BU02
e1
DS
X1/3
X1/L
X1/5
X1/N
X1/PE
PE

A02467401