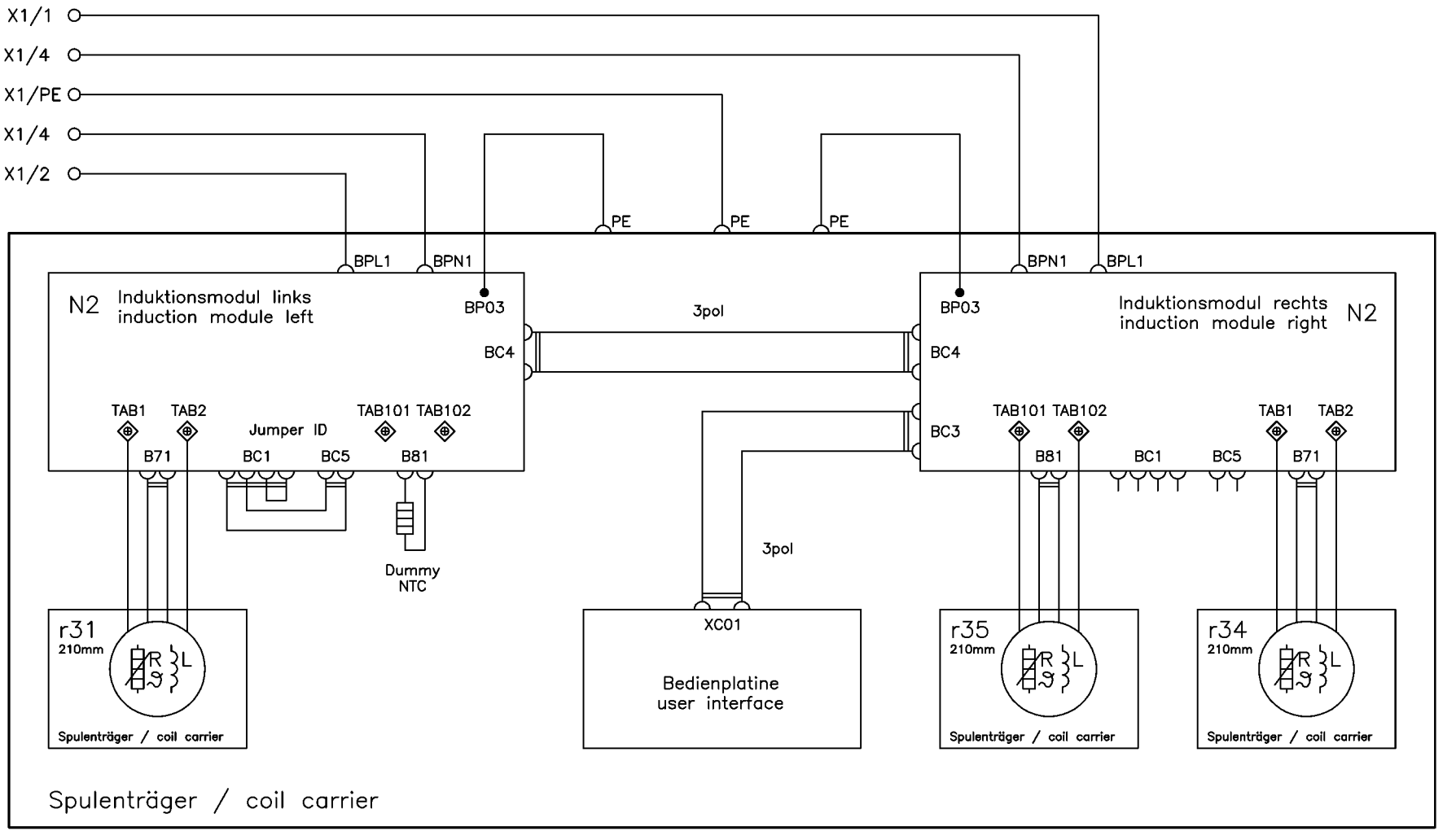

P0DGT300000040