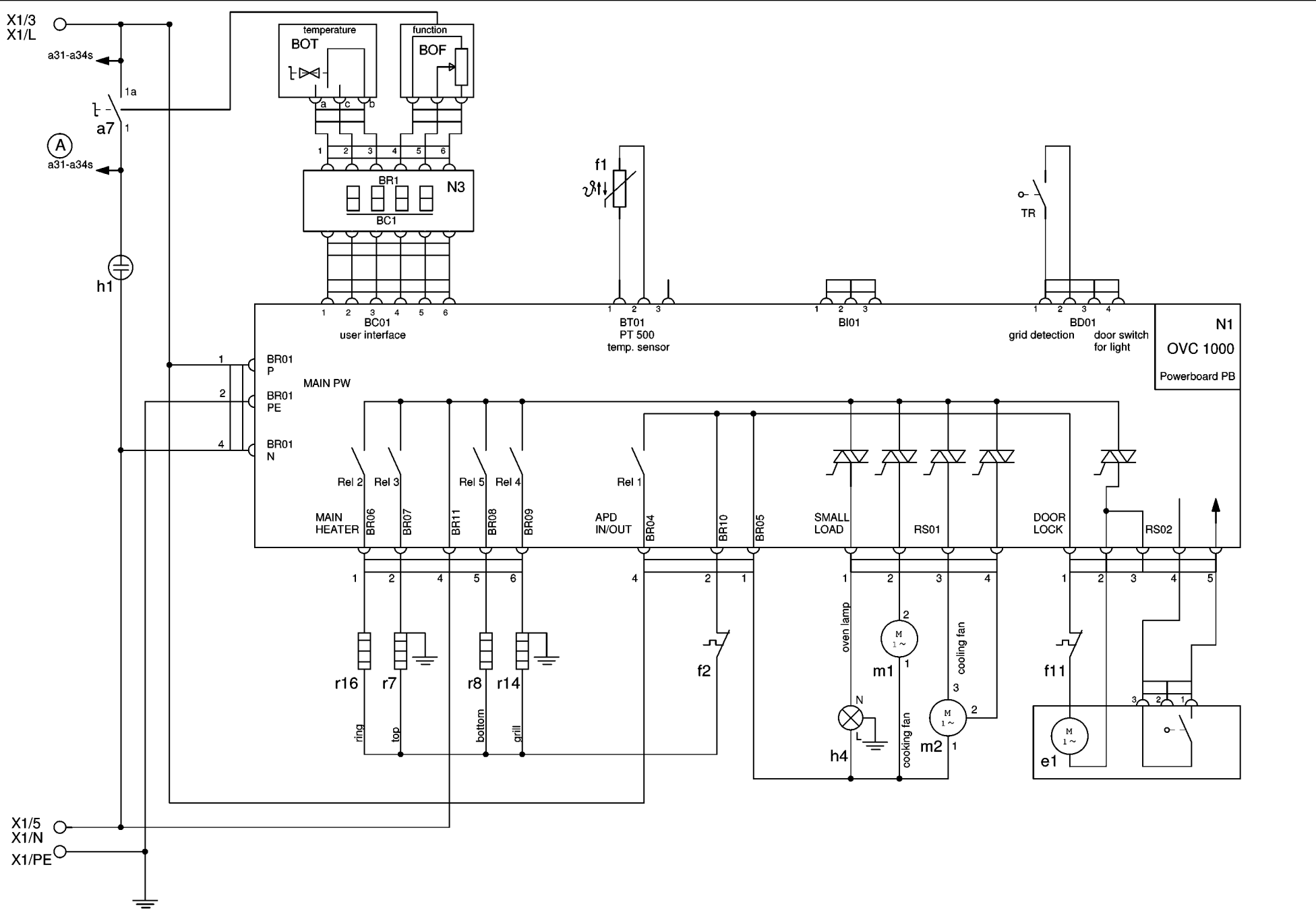

P0DGT300000009