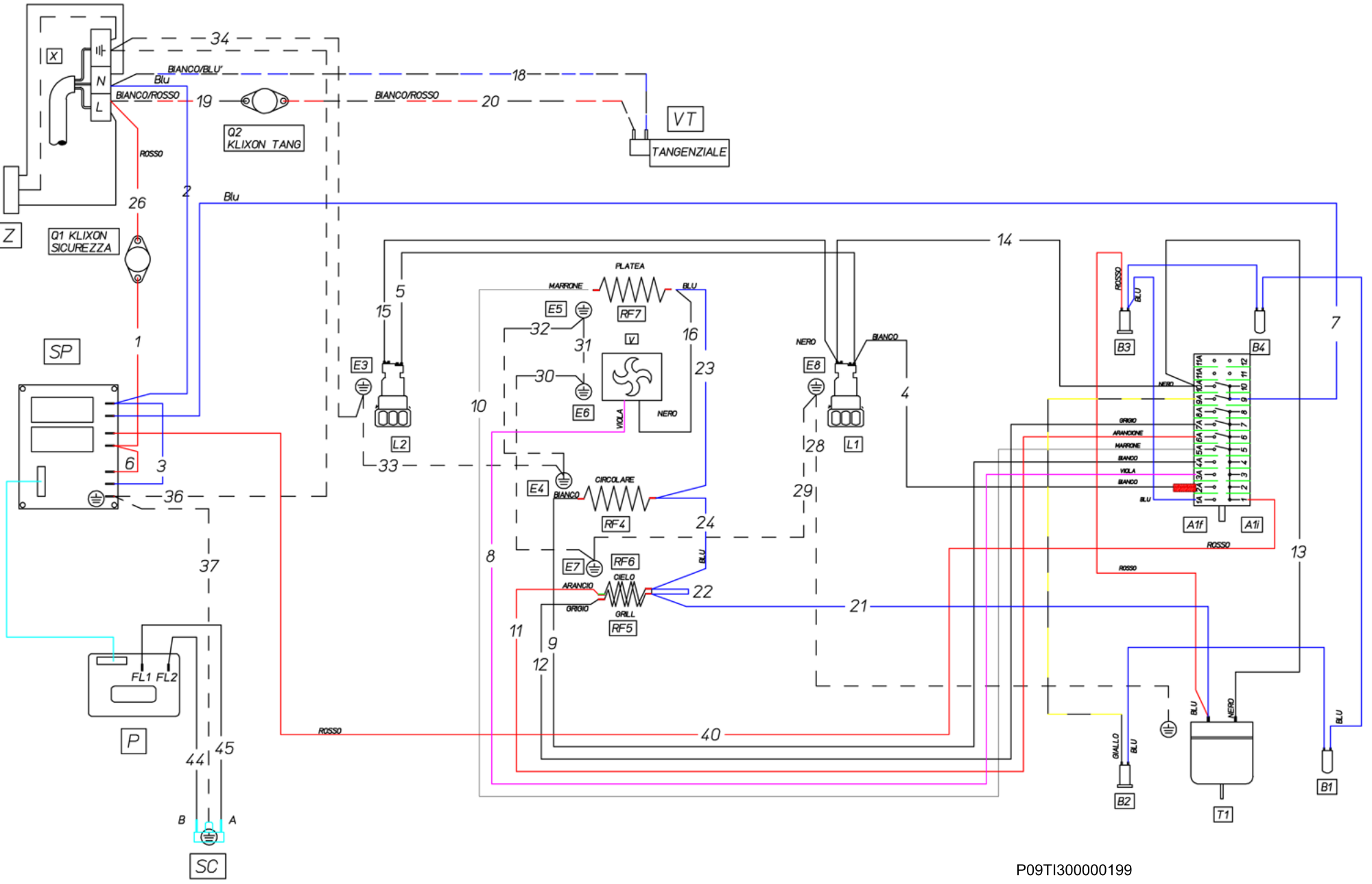

P09TI300000199