947727078 FMT990XE

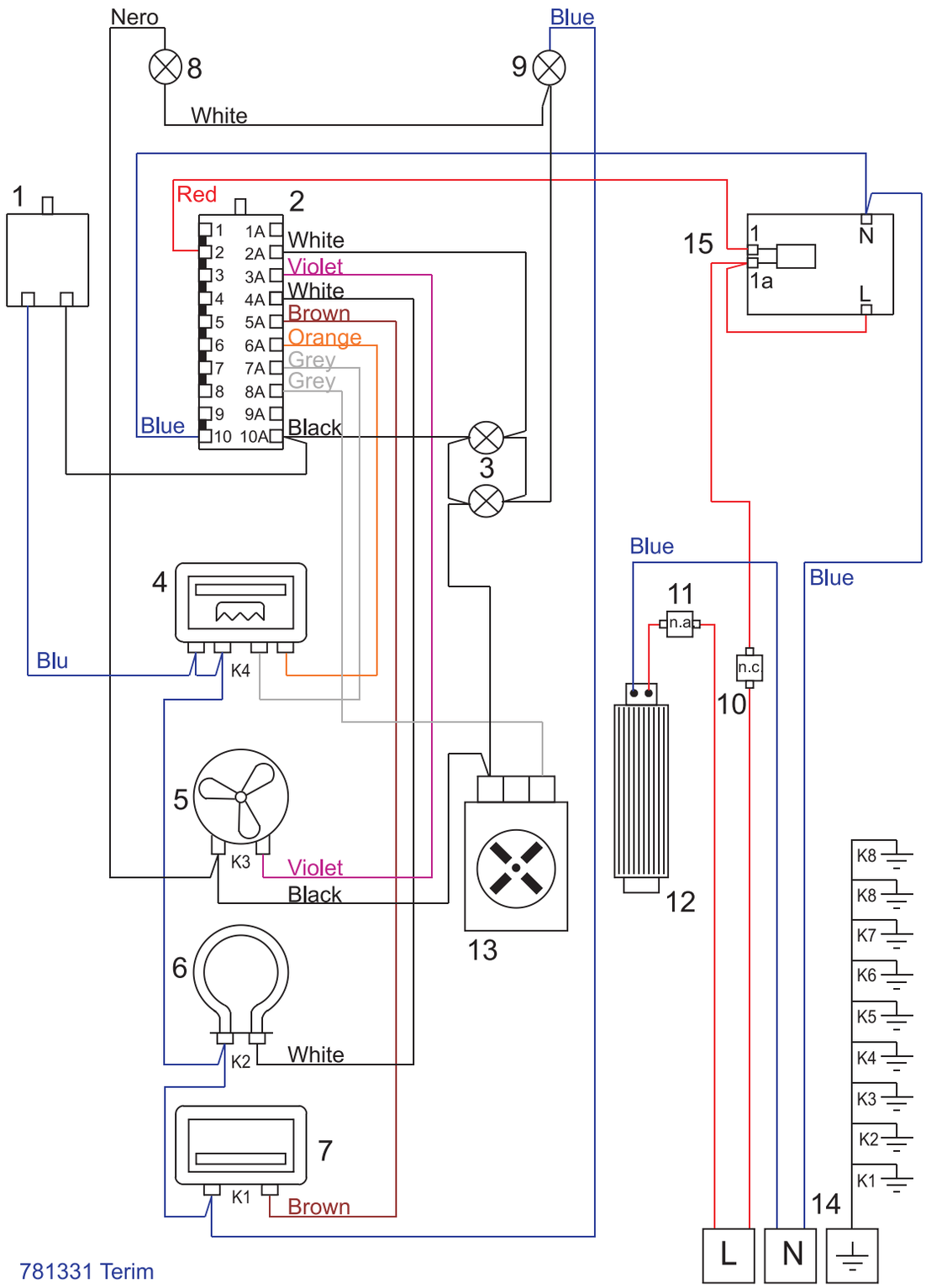

781331 Terim

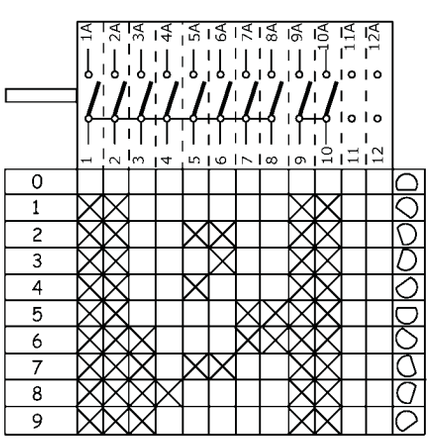

1 Oven Thermostat
2 Oven function commutator
3 Oven lamp
4 Upper heating element + Grill
5 Fun motor
6 Circular heating element
7 Lower heating element

8 Warning light
9 Warning light thermostat
10 Thermo switch
11 Thermo switch for tangential
12 Tangential motor
13 Turnspit motor
14 Supply terminal board
15 Display