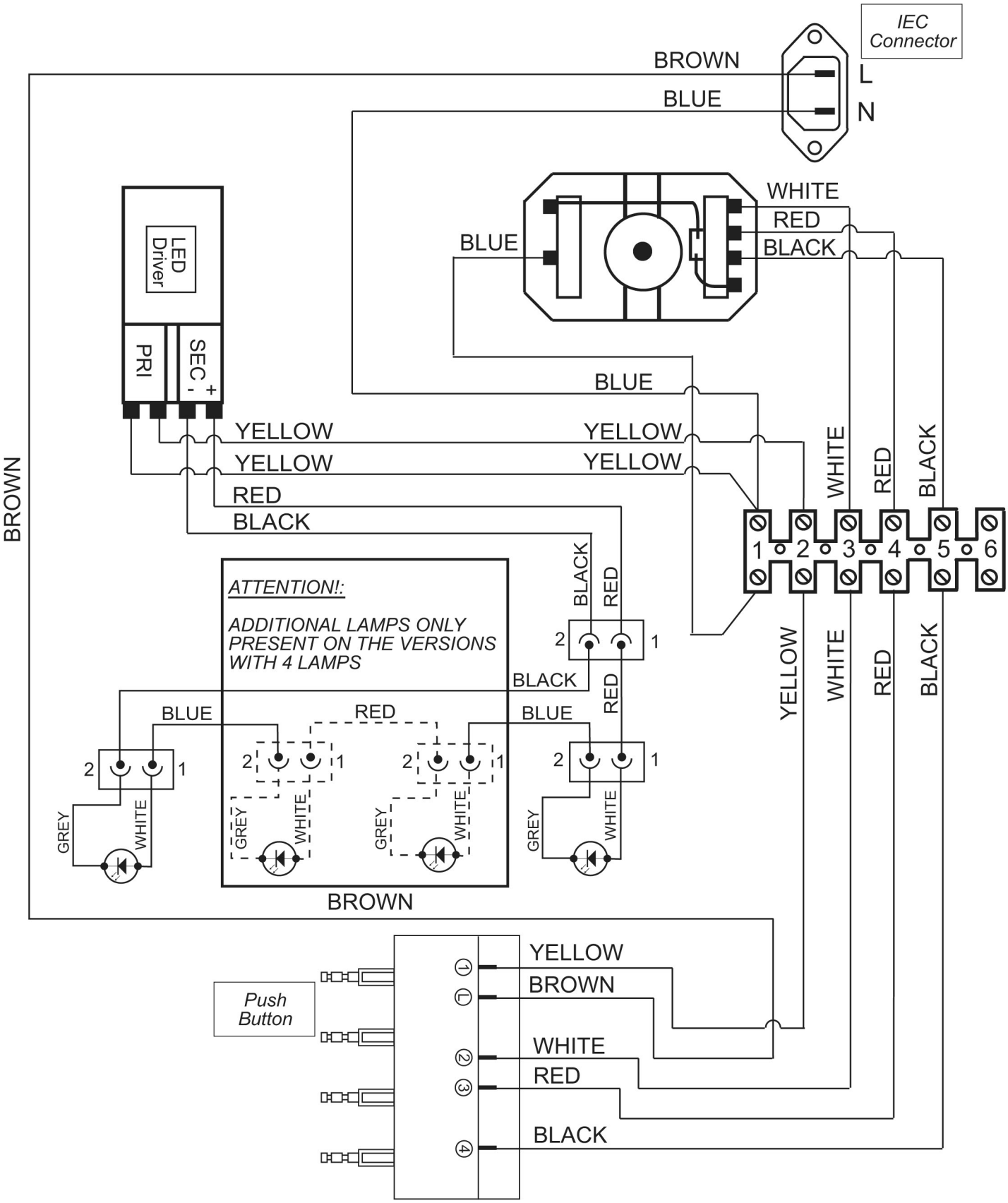
IEC Connector
BROWN
BLUE
L
N
WHITE
RED
BLACK
BLUE
LED Driver
PRI
SEC
+
-
BLUE
YELLOW
YELLOW
YELLOW
YELLOW
RED
BLACK
BROWN
WHITE
RED
BLACK
1
2
3
4
5
6
ATTENTION!:
ADDITIONAL LAMPS ONLY PRESENT ON THE VERSIONS WITH 4 LAMPS
BLACK
RED
BLACK
RED
BLUE
RED
BLUE
YELLOW
WHITE
RED
BLACK
GREY
WHITE
BROWN
Push Button
YELLOW
BROWN
WHITE
RED
BLACK