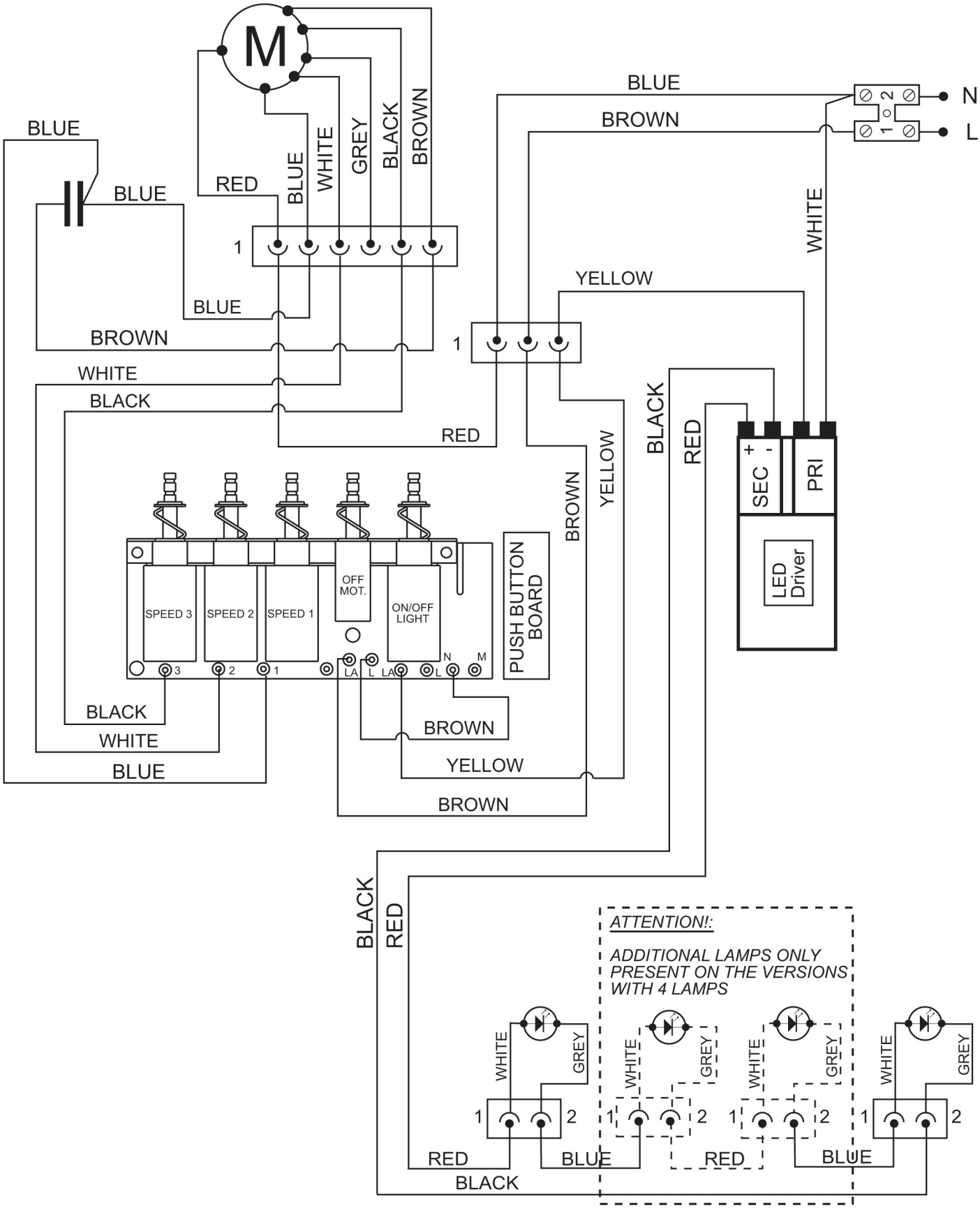
M
BLUE
WHITE
GREY
BLACK
BROWN
RED
BLUE
BLUE
BLUE
BROWN
WHITE
BLACK
1
BLUE
BROWN
N
L
2
1
WHITE
YELLOW
1
RED
BROWN
YELLOW
BLACK
RED
SEC
+
-
PRI
LED Driver
SPEED 3
SPEED 2
SPEED 1
OFF MOT.
ON/OFF LIGHT
PUSH BUTTON BOARD
3
2
1
LA
L
LA
L
N
M
BLACK
WHITE
BLUE
BROWN
YELLOW
BROWN
BLACK
RED
ATTENTION!:
ADDITIONAL LAMPS ONLY PRESENT ON THE VERSIONS WITH 4 LAMPS
WHITE
GREY
1
2
RED
BLUE
BLACK
WHITE
GREY
1
2
RED
WHITE
GREY
1
2
BLUE
WHITE
GREY
1
2