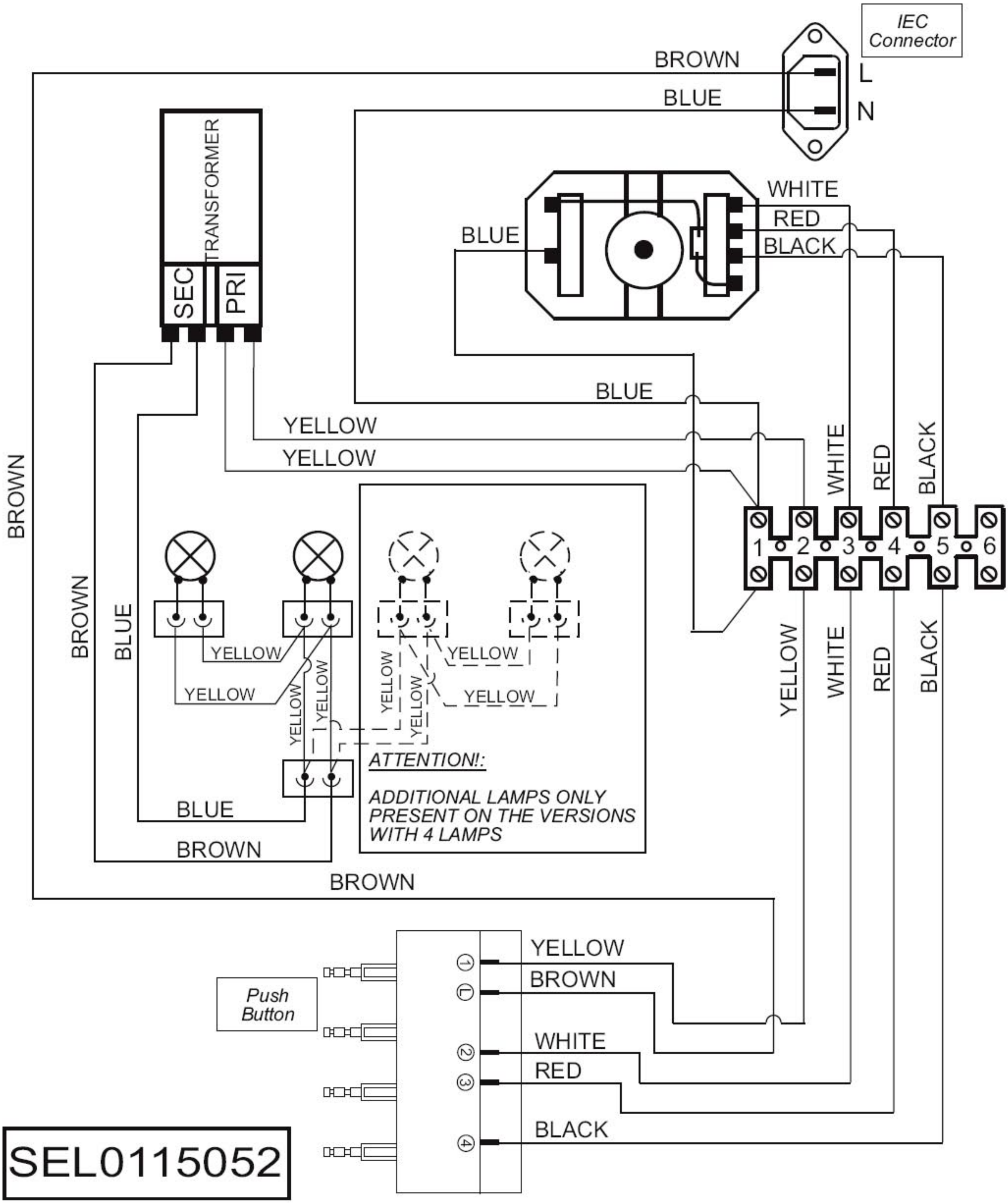
IEC Connector
BROWN
BLUE
L
N
TRANSFORMER
SEC
PRI
BLUE
WHITE
RED
BLACK
BLUE
YELLOW
YELLOW
BROWN
BROWN
BLUE
YELLOW
YELLOW
YELLOW
YELLOW
YELLOW
YELLOW
YELLOW
YELLOW
YELLOW
BLUE
BROWN
ATTENTION!:
ADDITIONAL LAMPS ONLY PRESENT ON THE VERSIONS WITH 4 LAMPS
WHITE
RED
BLACK
1 2 3 4 5 6
YELLOW
WHITE
RED
BLACK
BROWN
Push Button
YELLOW
BROWN
WHITE
RED
BLACK
SEL0115052