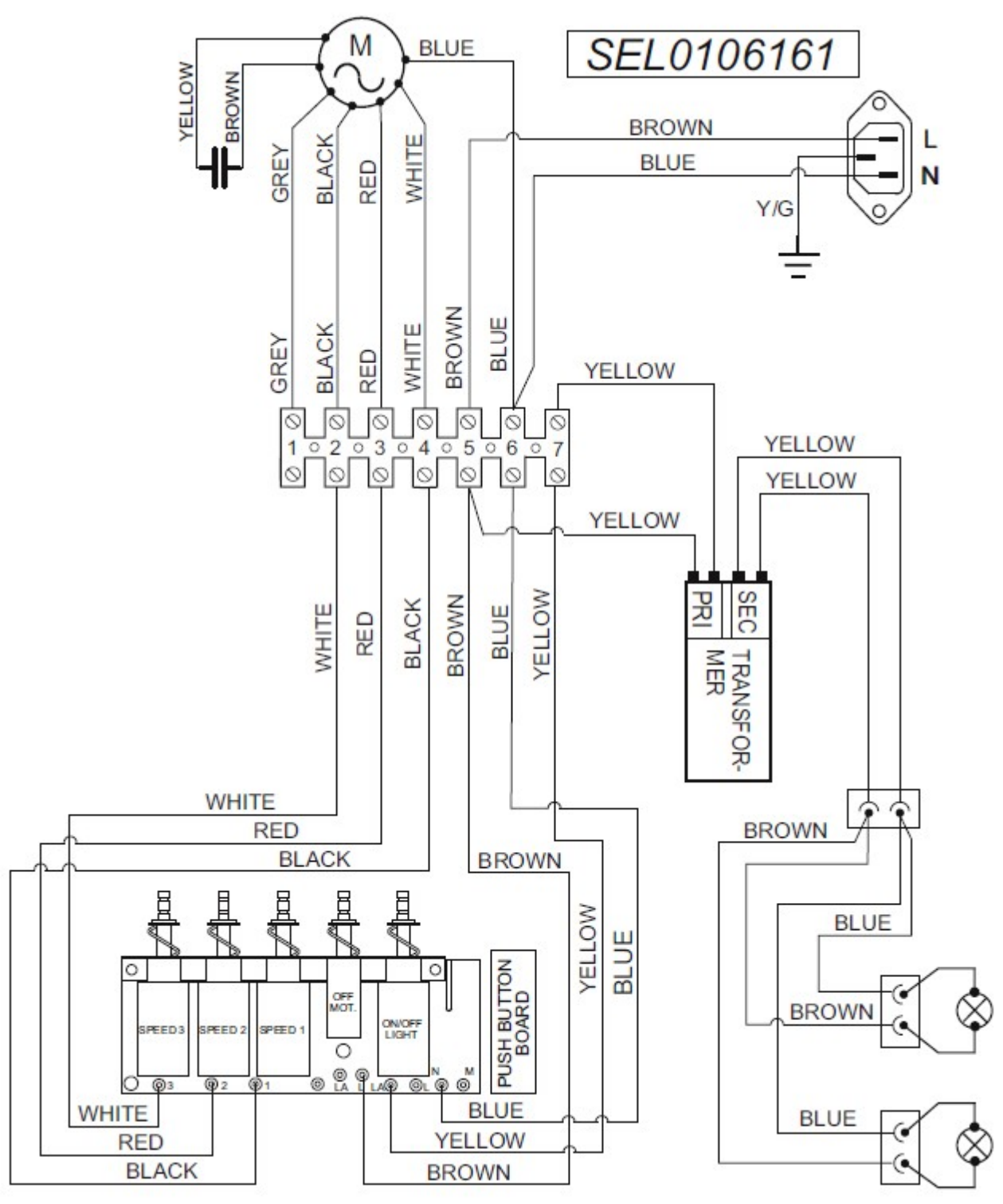
SEL0106161
M
BLUE
YELLOW
BROWN
GREY
BLACK
RED
WHITE
BROWN
BLUE
L
N
Y/G
YELLOW
1
2
3
4
5
6
7
PRI
SEC
TRANSFOR-MER
SPEED 3
SPEED 2
SPEED 1
OFF MOT.
ON/OFF LIGHT
PUSH BUTTON BOARD
LA
L
N
M