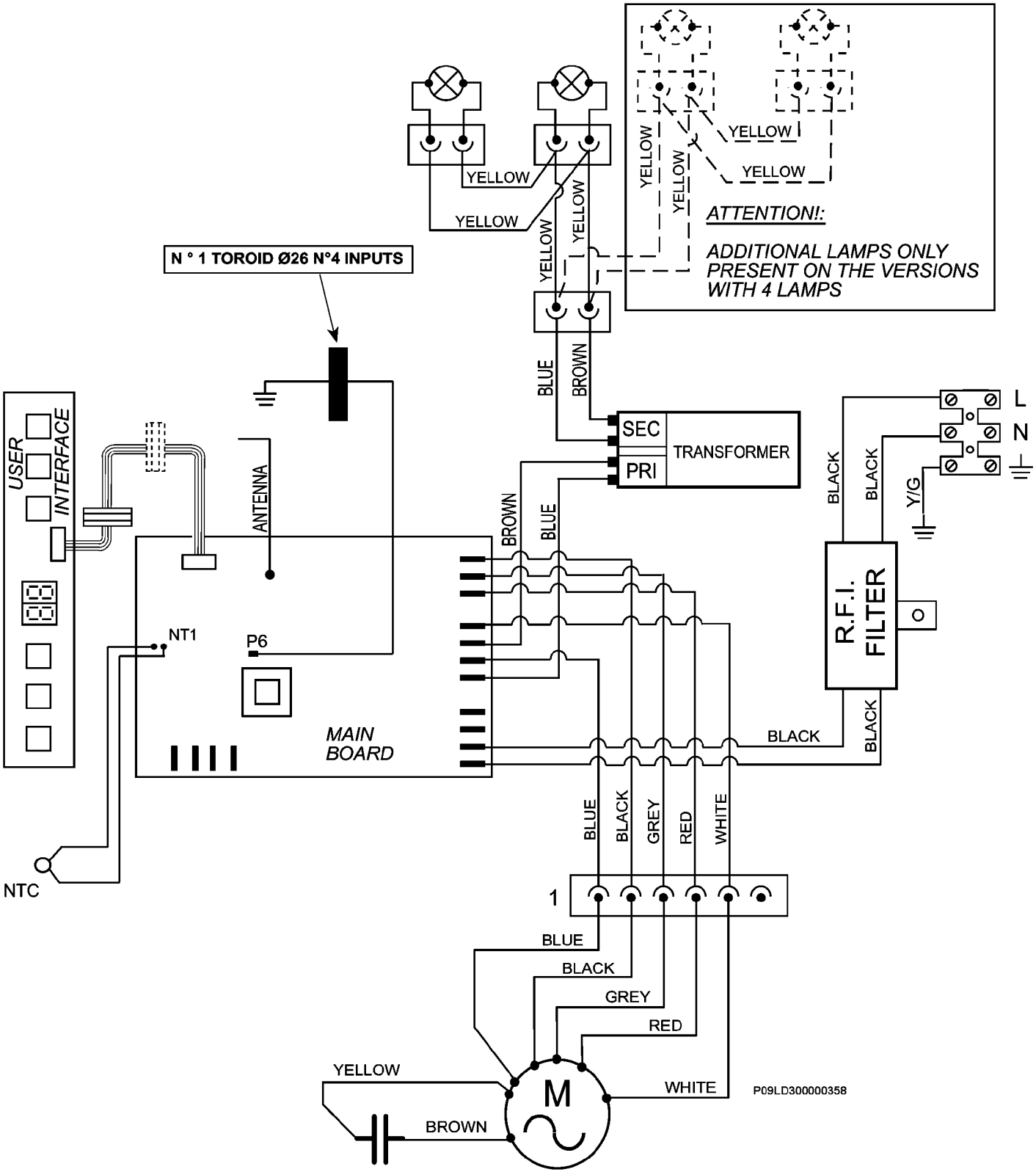
YELLOW
YELLOW
YELLOW
YELLOW
YELLOW
YELLOW
YELLOW
YELLOW
ATTENTION!:
ADDITIONAL LAMPS ONLY PRESENT ON THE VERSIONS WITH 4 LAMPS
N ° 1 TOROID Ø26 N°4 INPUTS
BLUE
BROWN
SEC
PRI
TRANSFORMER
L
N
BLACK
BLACK
Y/G
USER INTERFACE
ANTENNA
BROWN
BLUE
R.F.I. FILTER
NT1
P6
MAIN BOARD
BLACK
BLACK
BLUE
BLACK
GREY
RED
WHITE
NTC
1
BLUE
BLACK
GREY
RED
WHITE
YELLOW
BROWN
M
P09LD300000358