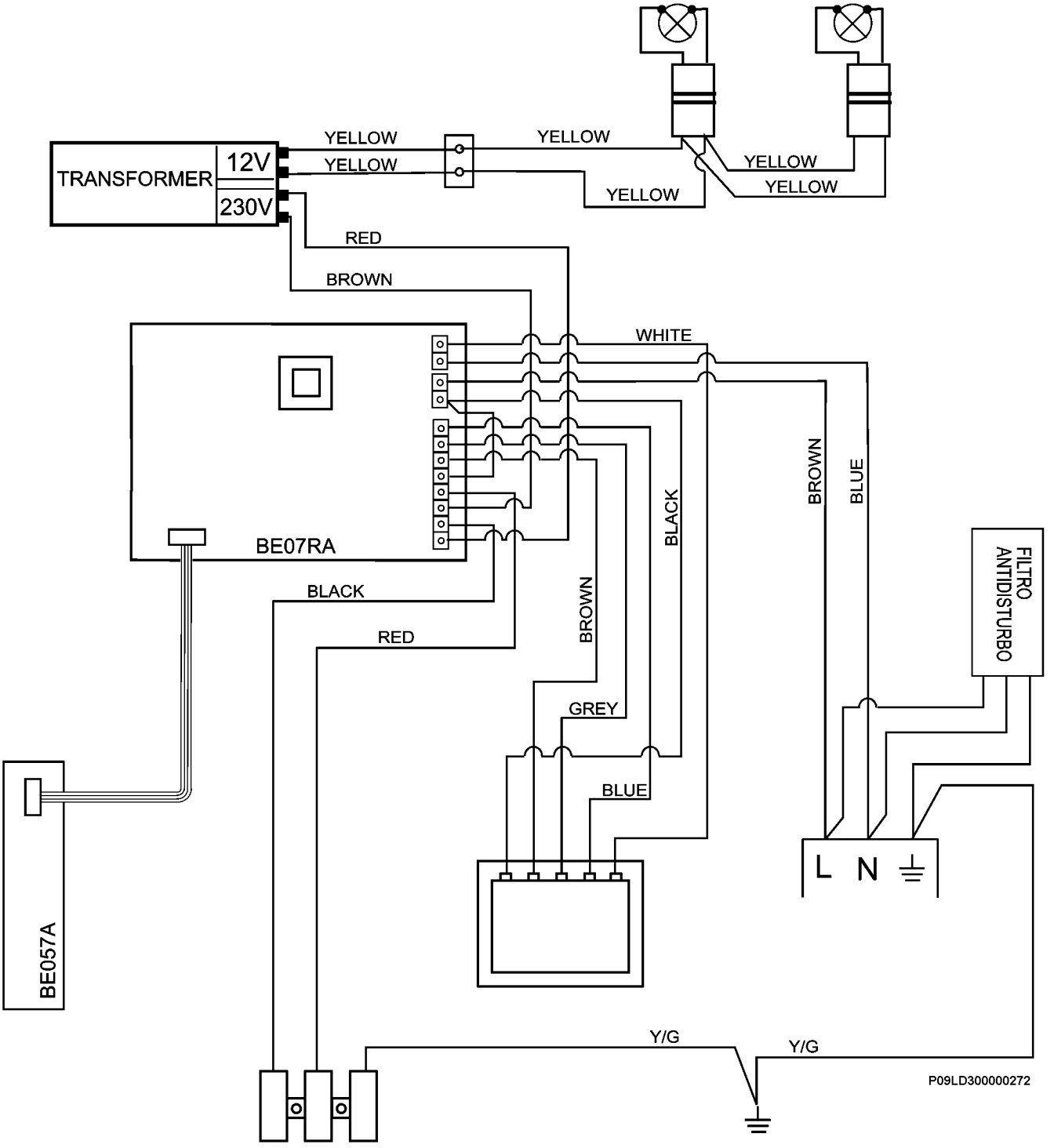
TRANSFORMER
12V
230V
YELLOW
YELLOW
YELLOW
YELLOW
YELLOW
YELLOW
YELLOW
RED
BROWN
WHITE
BE07RA
BLACK
RED
BROWN
BLACK
BROWN
BLUE
GREY
BLUE
FILTRO ANTIDISTURBO
L
N
BE057A
Y/G
Y/G
P09LD300000272