6.CIRCUIT DIAGRAM
T-19

OVEN CONDITION
DOOR: OPEN

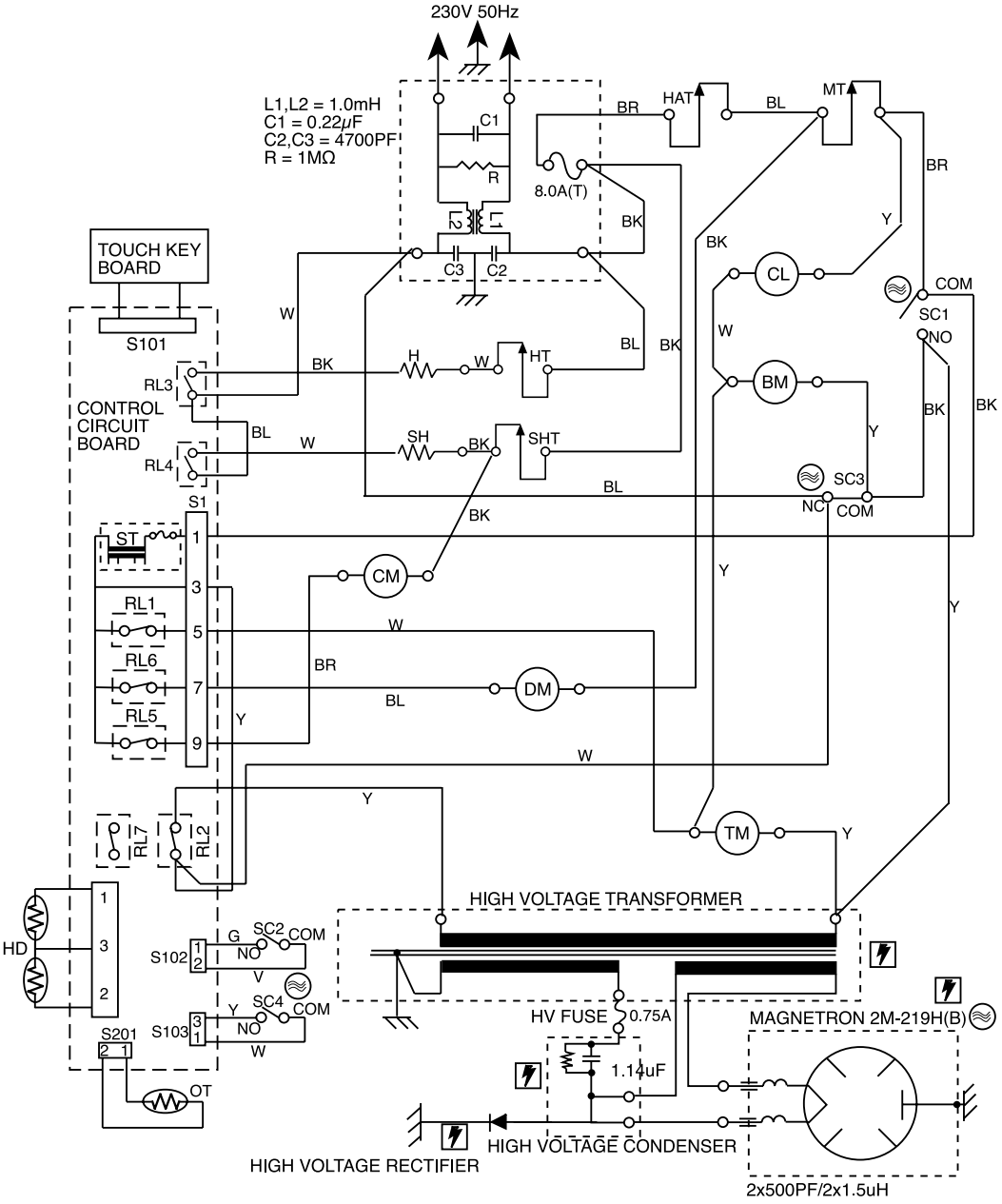

SC1 :	PRIMARY INTERLOCK SWITCH	BM :	BLOWER MOTOR	WIRING COLOUR	
SC2 :	DOOR SENSING SWITCH	CM :	CONVEC. FAN MOTOR	W	: WHITE
SC3 :	INTERLOCK MONITOR SWITCH	TM :	TURNTABLE MOTOR	G	: GREY
SC4 :	DAMPER SWITCH	DM :	DUMPER MOTOR	LB	: LIGHT BLUE
HT :	THERMAL PROTECTOR FOR GRILL	CL :	OVEN LAMP	BK	: BLACK
MT :	THERMAL PROTECTOR ON WAVEGUIDE	H :	GRILL HEATER	V	: VIOLET
HAT :	THERMAL PROTECTOR FOR CAVITY	SH :	CONVEC. HEATER	BR	: BROWN
SHT :	THERMAL PROTECTOR FOR CONVEC.	OT :	OVEN THERMISTOR	Y	: YELLOW
RL1 :	MAIN RELAY	HD :	HUMIDITY DETECTOR	BL	: BLUE
RL2 :	POWER CONTROL RELAY				
RL3 :	GRILL HEATER RELAY				
RL4 :	CONVEC. HEATER RELAY				
RL5 :	FAN MOTOR RELAY				
RL6 :	DAMPER MOTOR RELAY				