SCHEMATIC DIAGRAM
(DOOR OPENED,COOK OFF CONDITION)

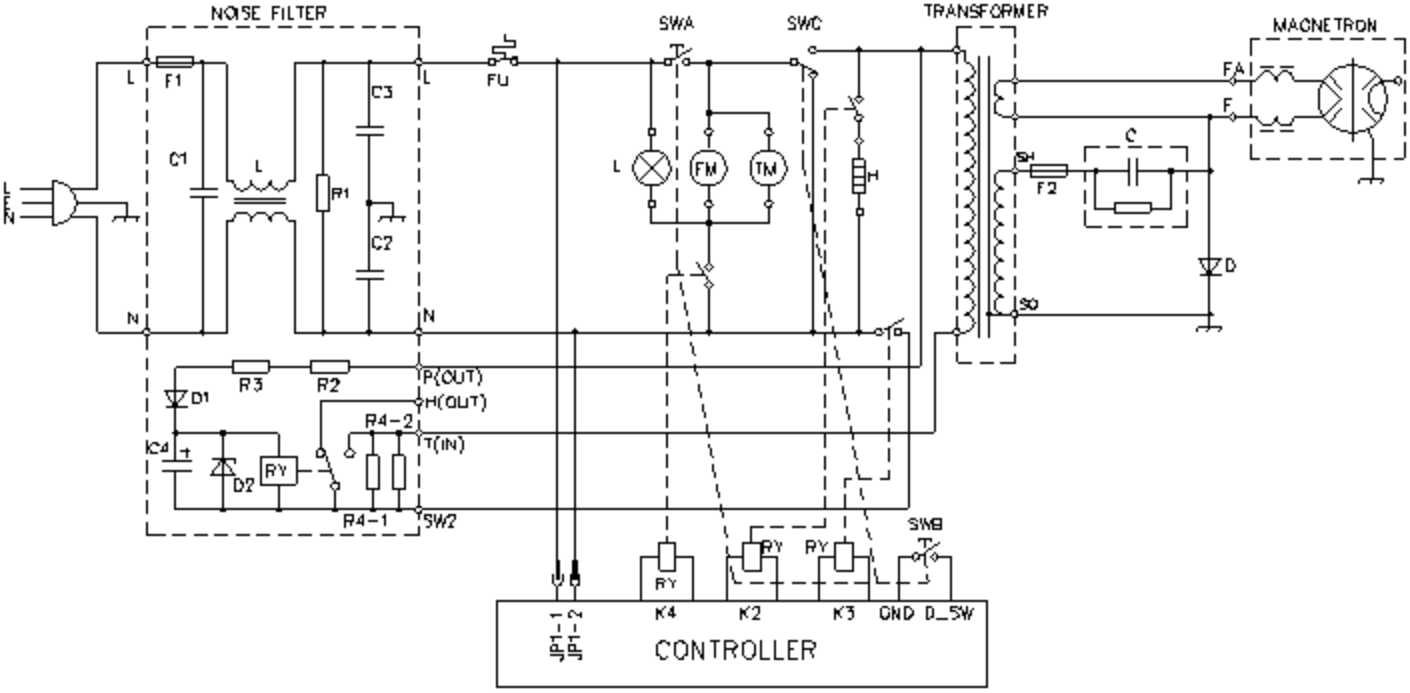

SWA: PRIMARY INTERLOCK SWITCH
SWB: SECONDARY INTERLOCK SWITCH
SWC: THE MONITOR INTERLOCK SWITCH

L: LAMP
FM: FAN MOTOR
TM: TURNTABLE MOTOR
H: HEATER

*CIRCUIT SUBJECT TO CHANGE WITHOUT NOTICE

P07ZN300000013