NOTE: If used as MONO unit, for the standby control needs, the cross section area of cable connected to W,1(L), 2(N) must be sufficient for the maximum system current. The maximum system current is equal to the sum of indoor unit and outdoor unit rated current. If used as MULTI unit, W on the terminal block does not need to be connected.

202032591566
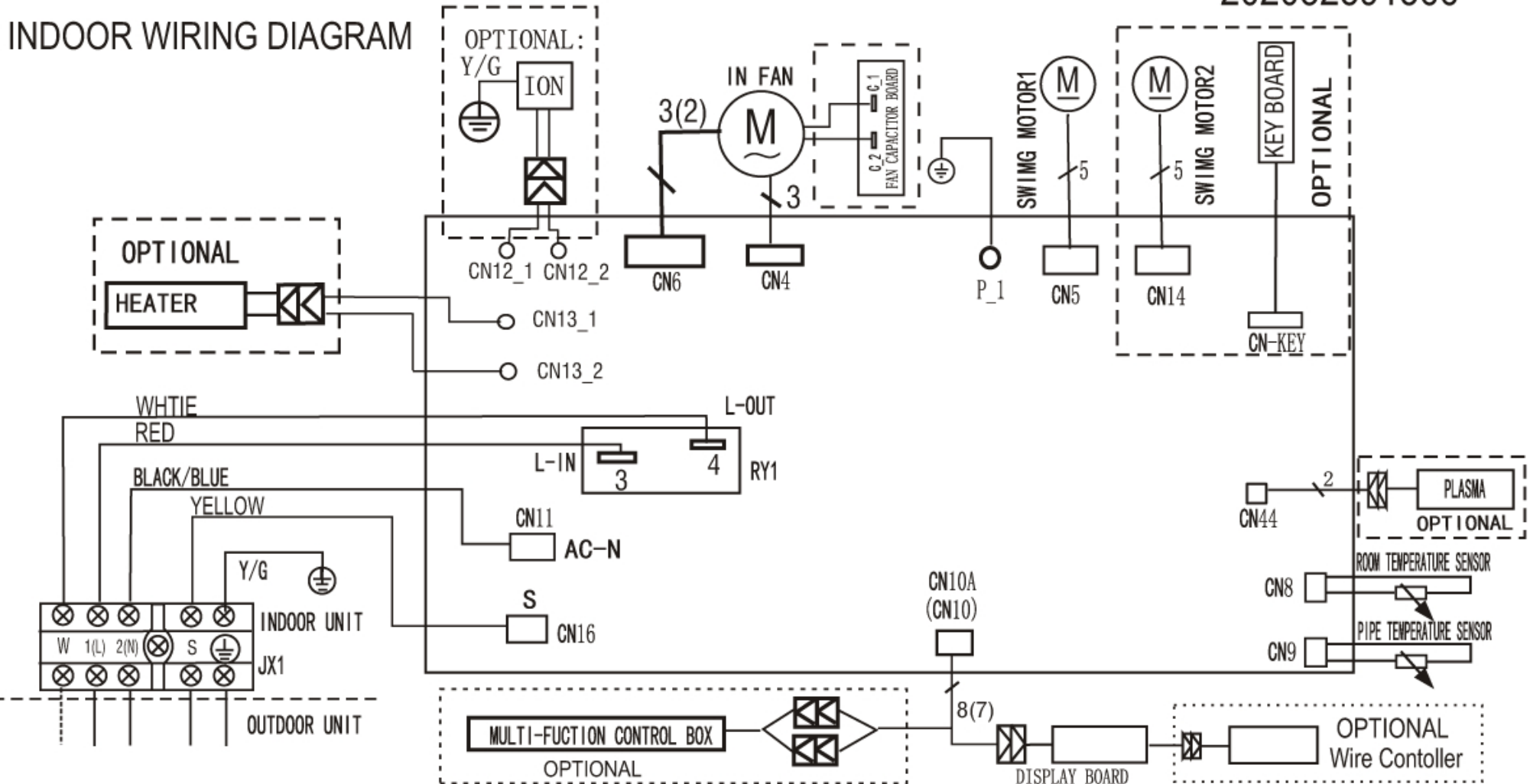
INDOOR WIRING DIAGRAM