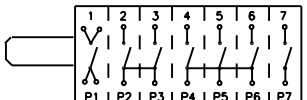
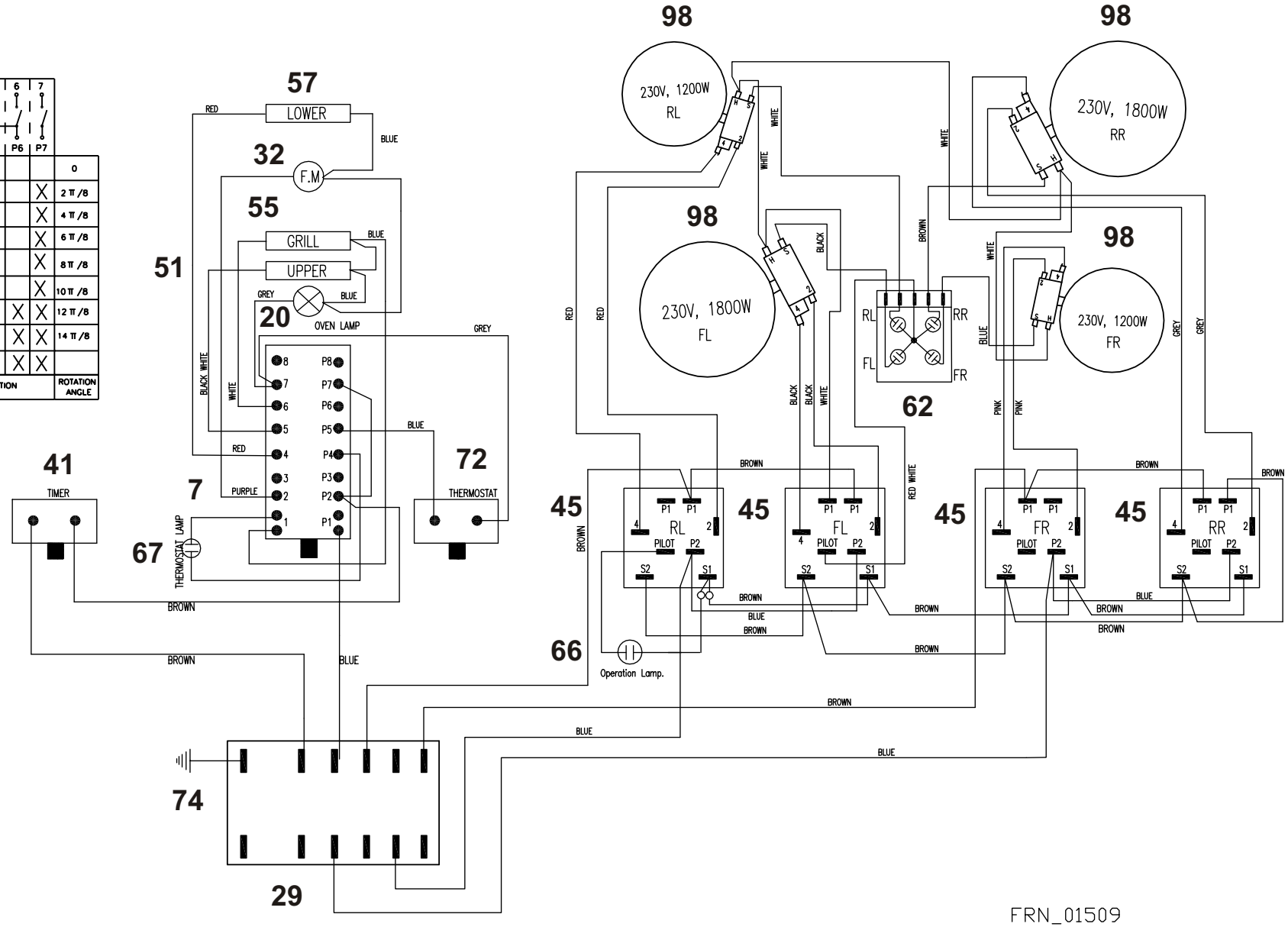
0								0
LIGHT	X						X	2 π /8
DEFROST	X	X					X	4 π /8
CLASSIC OVEN	X			X	X		X	6 π /8
TURBO CLASSIC OVEN	X	X		X	X		X	8 π /8
LOVER FAN	X	X		X			X	10 π /8
GRILL	X		X			X	X	12 π /8
DOUBLE GRILL	X		X		X	X	X	14 π /8
DOUBLE GRILL+FAN	X	X	X		X	X	X	
FUNCTION	CONTACT SITUATION							ROTATION ANGLE