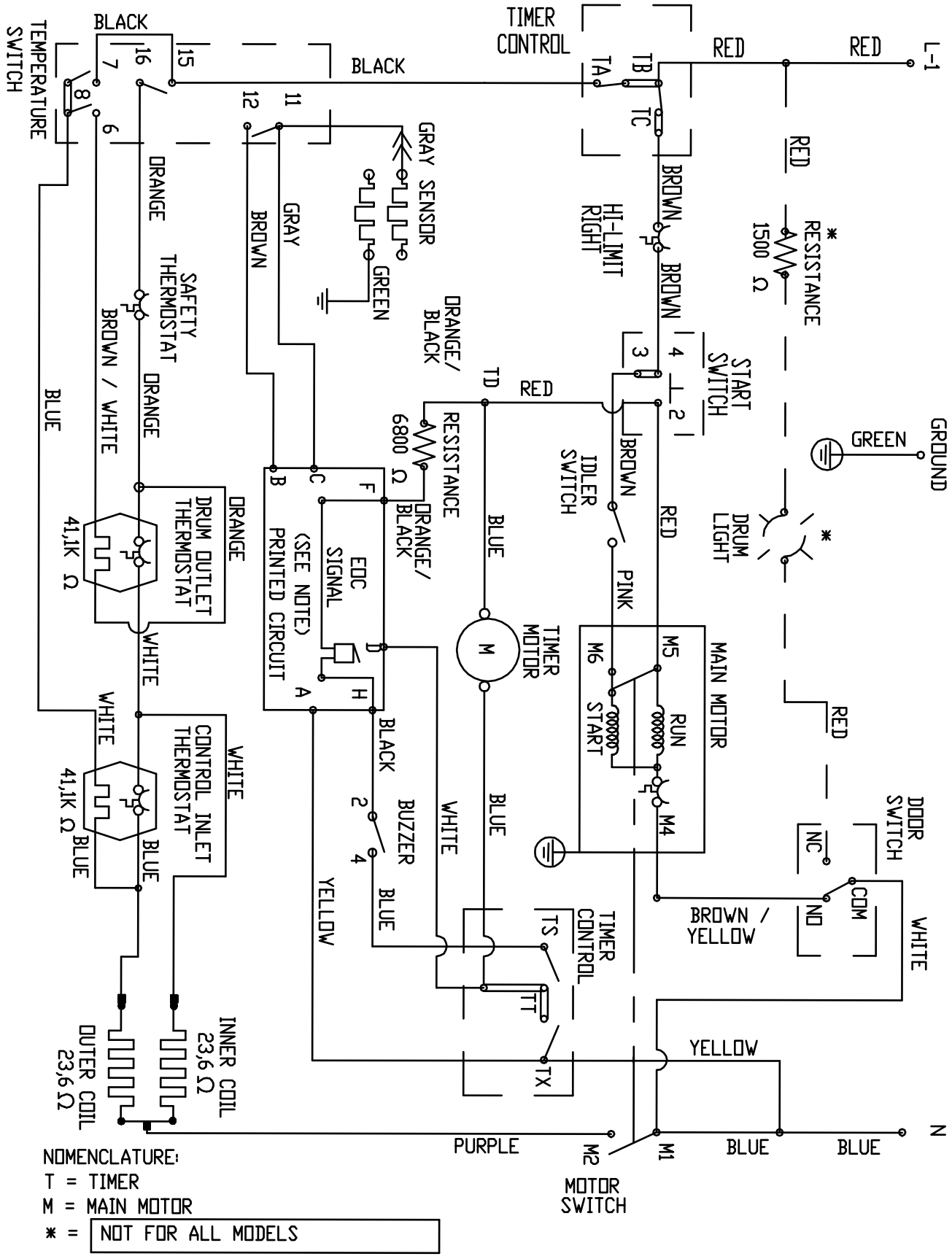

NOMENCLATURE:
T = TIMER
M = MAIN MOTOR
* = NOT FOR ALL MODELS

P07MB300000001