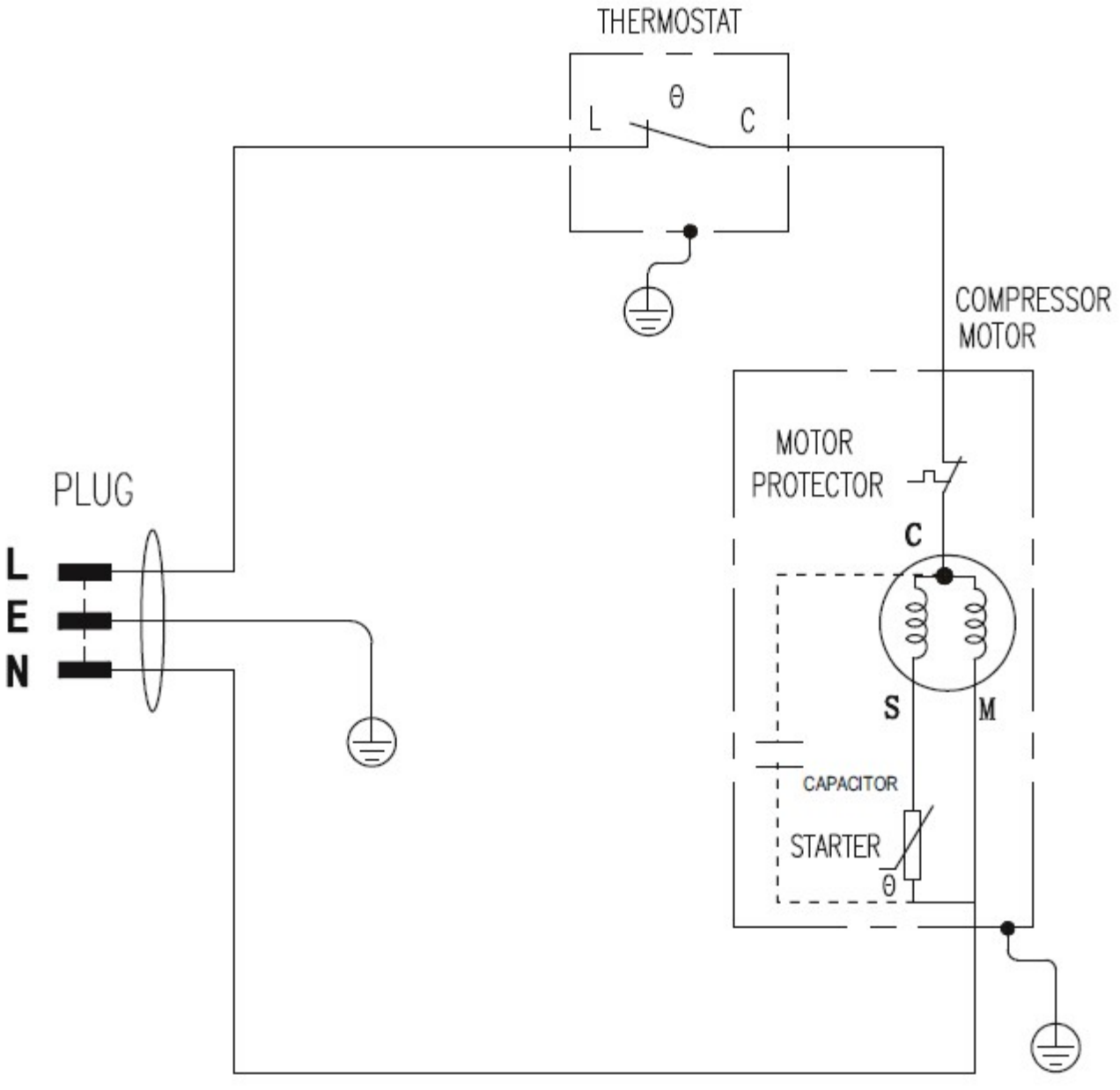
THERMOSTAT
θ
L
C
COMPRESSOR
MOTOR
MOTOR
PROTECTOR
PLUG
L
E
N
C
S
M
CAPACITOR
STARTER
θ