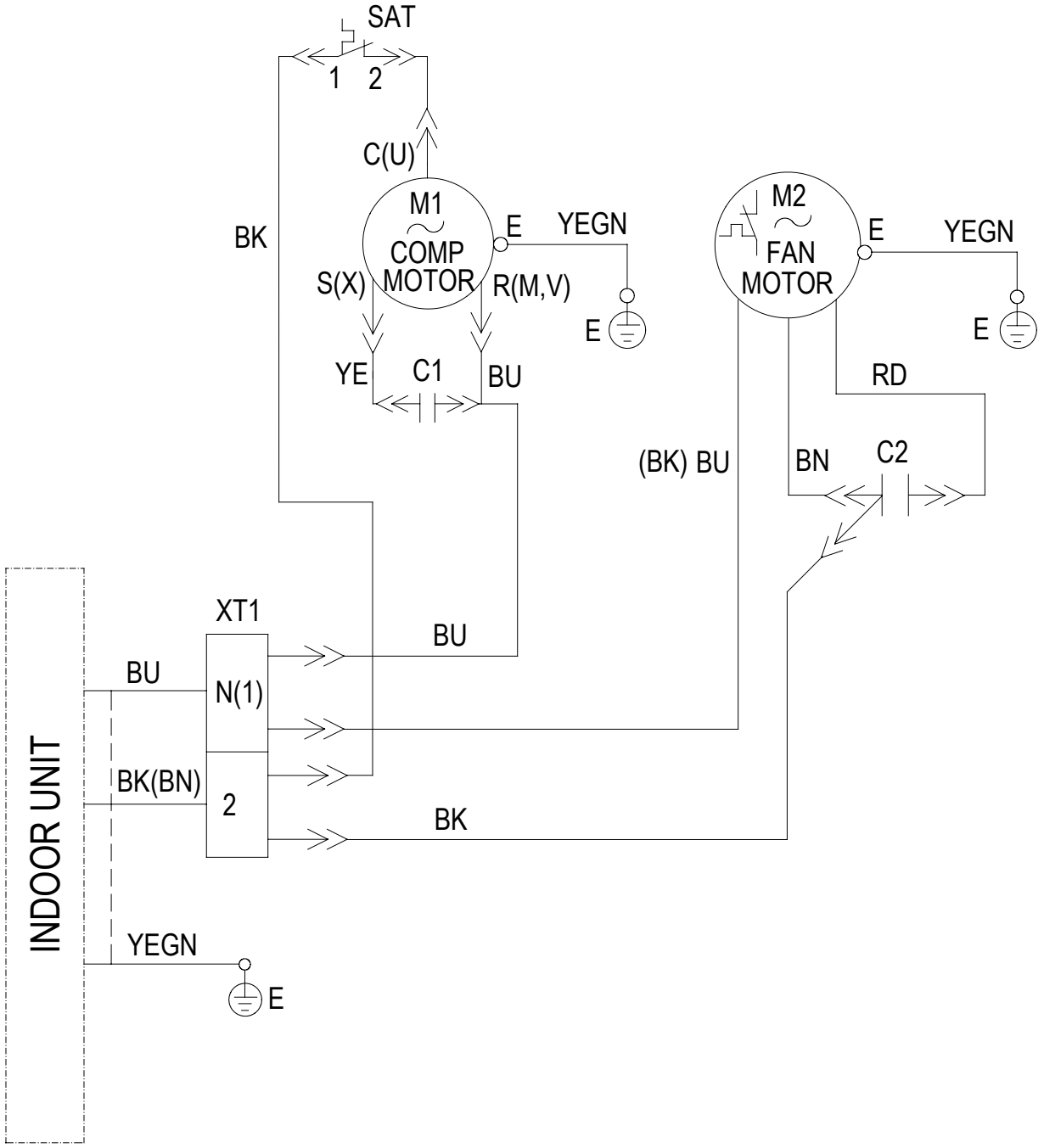


| Symbol | Color.symbol | Symbol | Parts.name |
|---|---|---|---|
| OG | ORANGE | ⏚ | PROTECTIVE.EARTH |
| WH | WHITE | COMP | COMPRESSOR |
| YE | YELLOW | SAT | OVERLOAD |
| RD | RED | 4V | 4-WAY.VALVE |
| YEGN | YELLOW.GREEN | XT | TERMINAL.BLOCK |
| BN | BROWN | | |
| BU | BLUE | | |
| BK | BLACK | | |

P07GR300000012