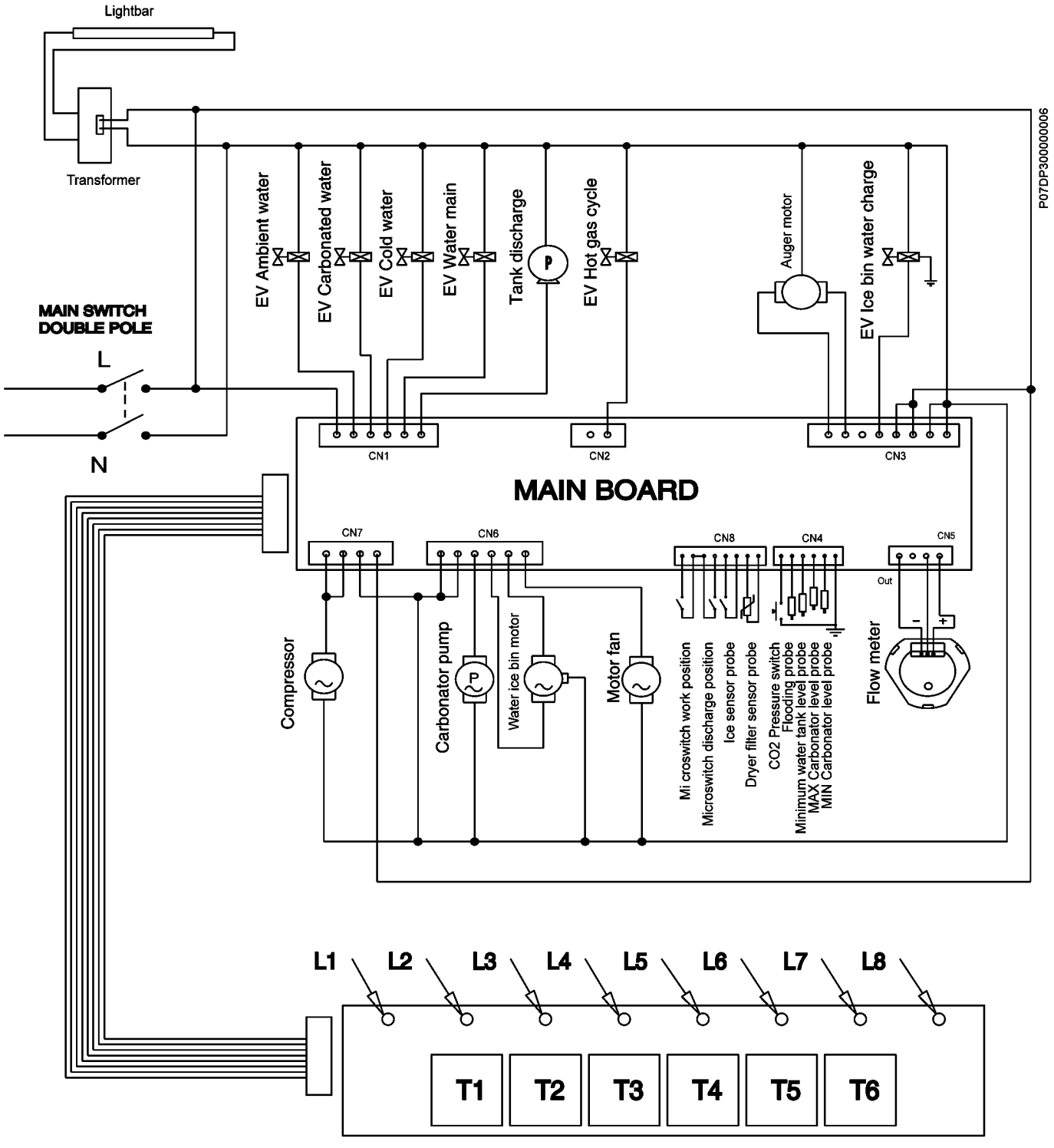
Lightbar
Transformer
P07DP30000006
EV Ambient water
EV Carbonated water
EV Cold water
EV Water main
Tank discharge
EV Hot gas cycle
Auger motor
EV Ice bin water charge
MAIN SWITCH
DOUBLE POLE
L
N
CN1
CN2
CN3
MAIN BOARD
CN7
CN6
CN8
CN4
CN5
Out
Compressor
Carbonator pump
Water ice bin motor
Motor fan
Mi croswitch work position
Microswitch discharge position
Ice sensor probe
Dryer filter sensor probe
CO2 Pressure switch
Flooding probe
Minimum water tank level probe
MAX Carbonator level probe
MIN Carbonator level probe
Flow meter
L1
L2
L3
L4
L5
L6
L7
L8
T1
T2
T3
T4
T5
T6