# SCHEMATIC DIAGRAM
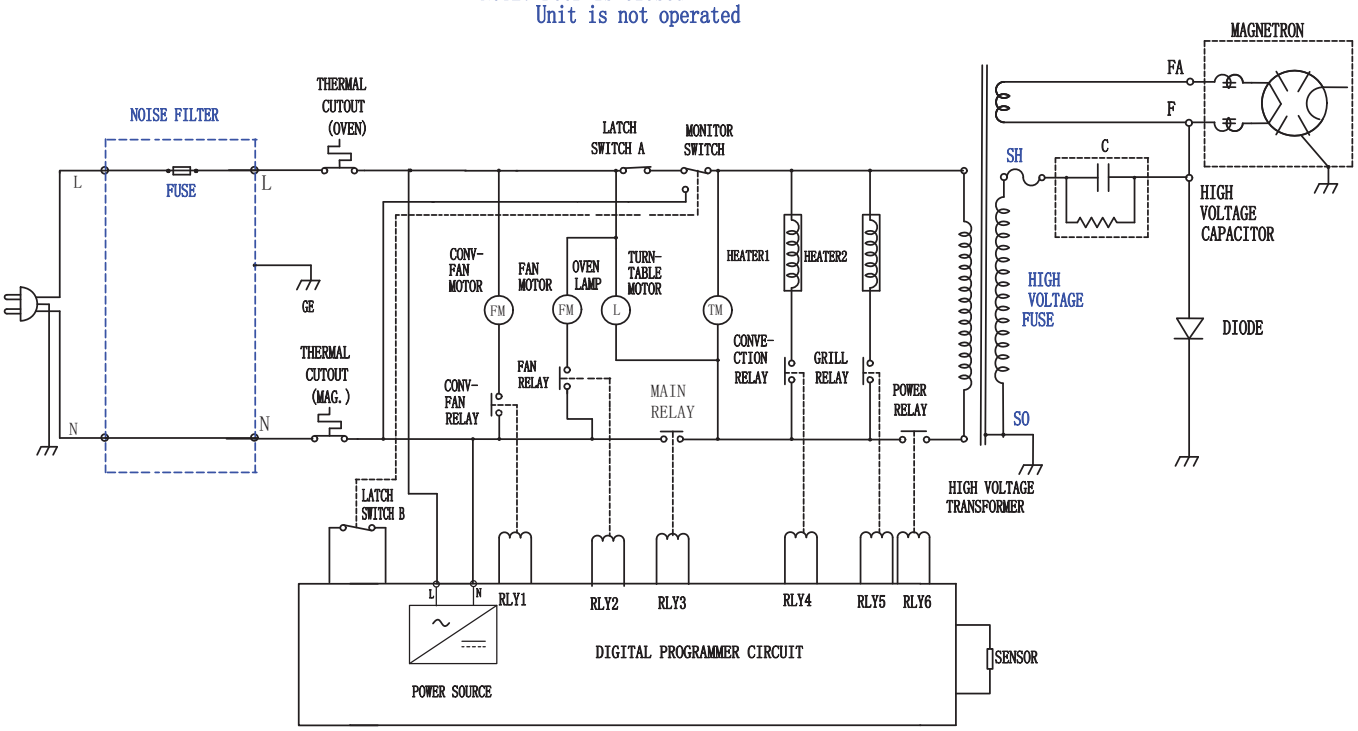
NOTE: Door is closed
Unit is not operated