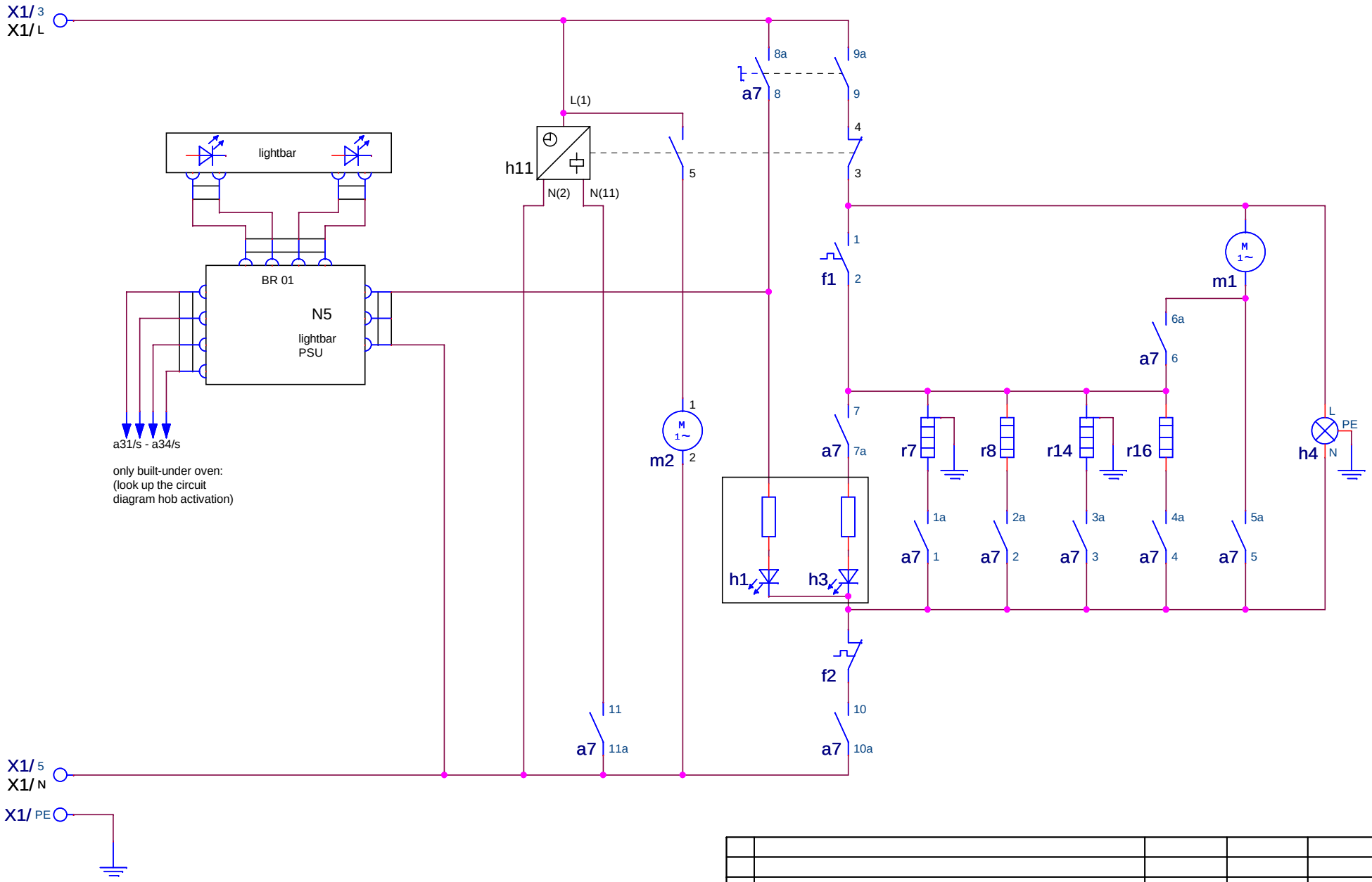

THE ITEM(s) SHOWN IN THIS DRAWING MUST NOT CONTAIN FORMALDEHYDE, CADMIUM, MERCURY, ASBESTOS ORPBB/PBDO.

THIS DRAWING CONTAINS CONFIDENTIAL INFORMATIONS. IT'S PROPERTY OF ELECTROLUX WITHOUT WHOSE PERMISSION IT MAY NOT BE COPIED, SHOWN OR HANDED TO A THIRD PARTY OR OTHERWISE USED, AND IT IS TO BE RETURNED PROMPTLY UPON REQUEST TO ELECTROLUX WHICH IS RESPONIBLE FOR THE DRAWING.

[2] CRITICAL DIMENSIONS WHICH MUST BE UNDER CAPABILITY

SAFETY RISKS

— — — : VISIBLE SURFACES
DRAFT ANGLES (NOT SHOWN): 00°00'00"

THEORETICAL FLAT AREA -

DEVELOPED FLAT AREA -

GENERAL TOLERANCES

ANGLES : ±°

LENGTHS AND DIAMETERS:
<18 mm. : ± ...
18 - 80 mm. : ± ...
>80 mm. : ± ...

A4

A	new drawing created	Renner	DGT 62215	08-08-2008
ZUST	MODIFICATIONS	SIGNATURE	REQUEST	DATE

DESIGN OWNER	DRN	CHD / APPR	DATE	DESIGN / USERS	EUROPEAN METHOD
	PD_HEO	Renner / Renner	08-08-2008	- / -	

Electrolux

TITLE circuit diagram oven

TITEL Schaltplan Herd

NUMBER 387 7029 SHEET 01(01) REV A