WIRING HARNESSES
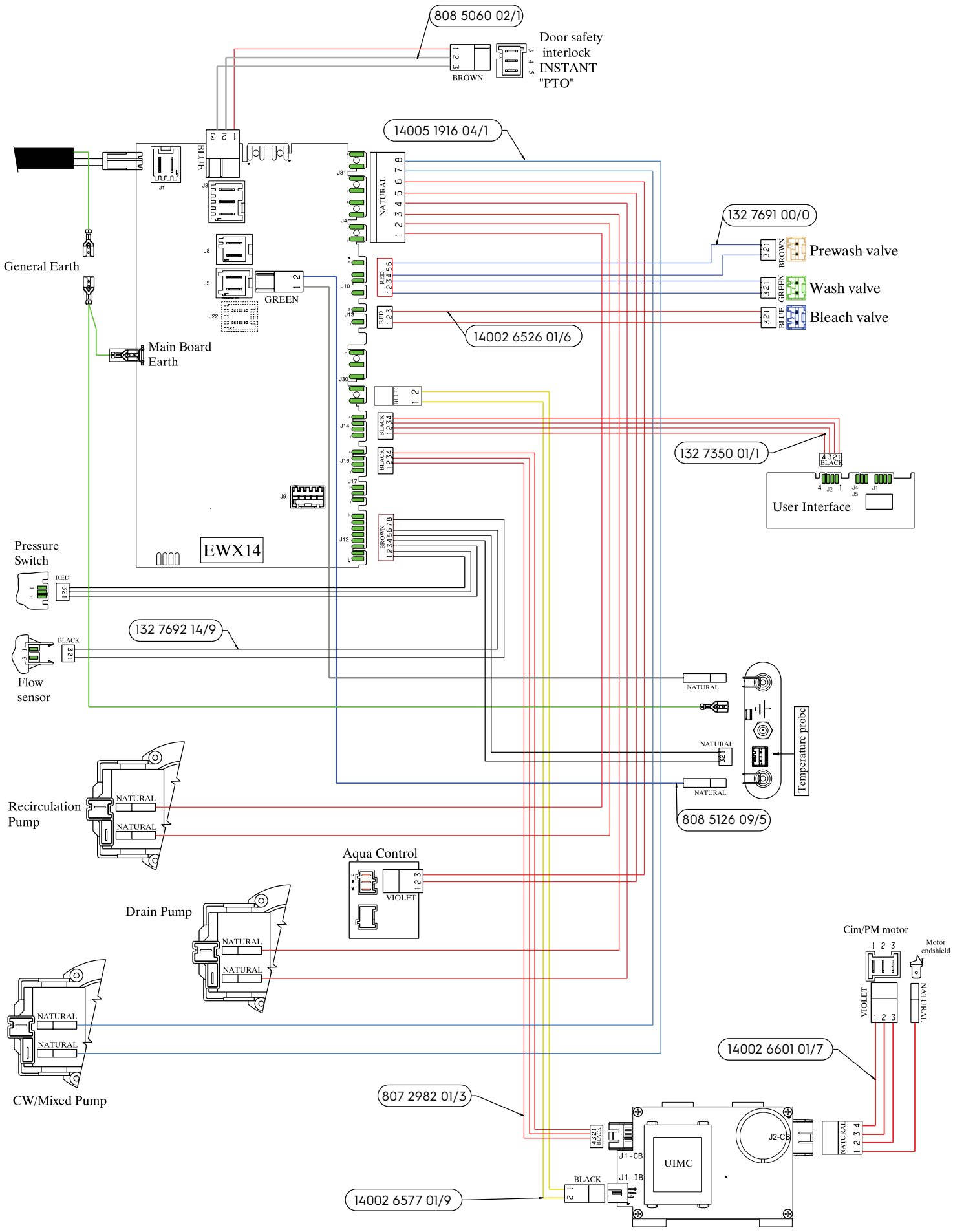
A01539387_C
P00ZP300005966