WIRING HARNESSES
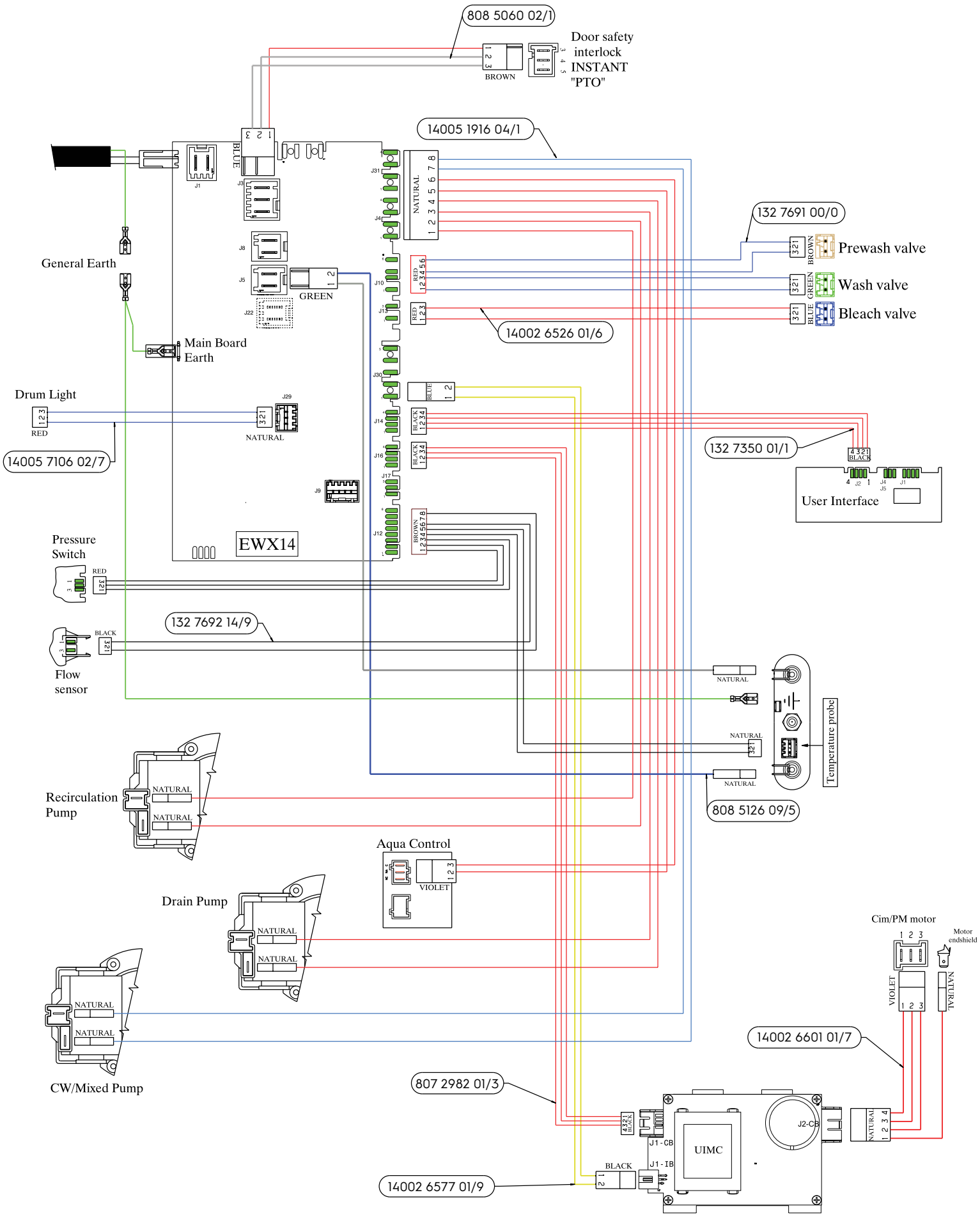
A01539390_C
P00ZP300005960