WIRING HARNESSES
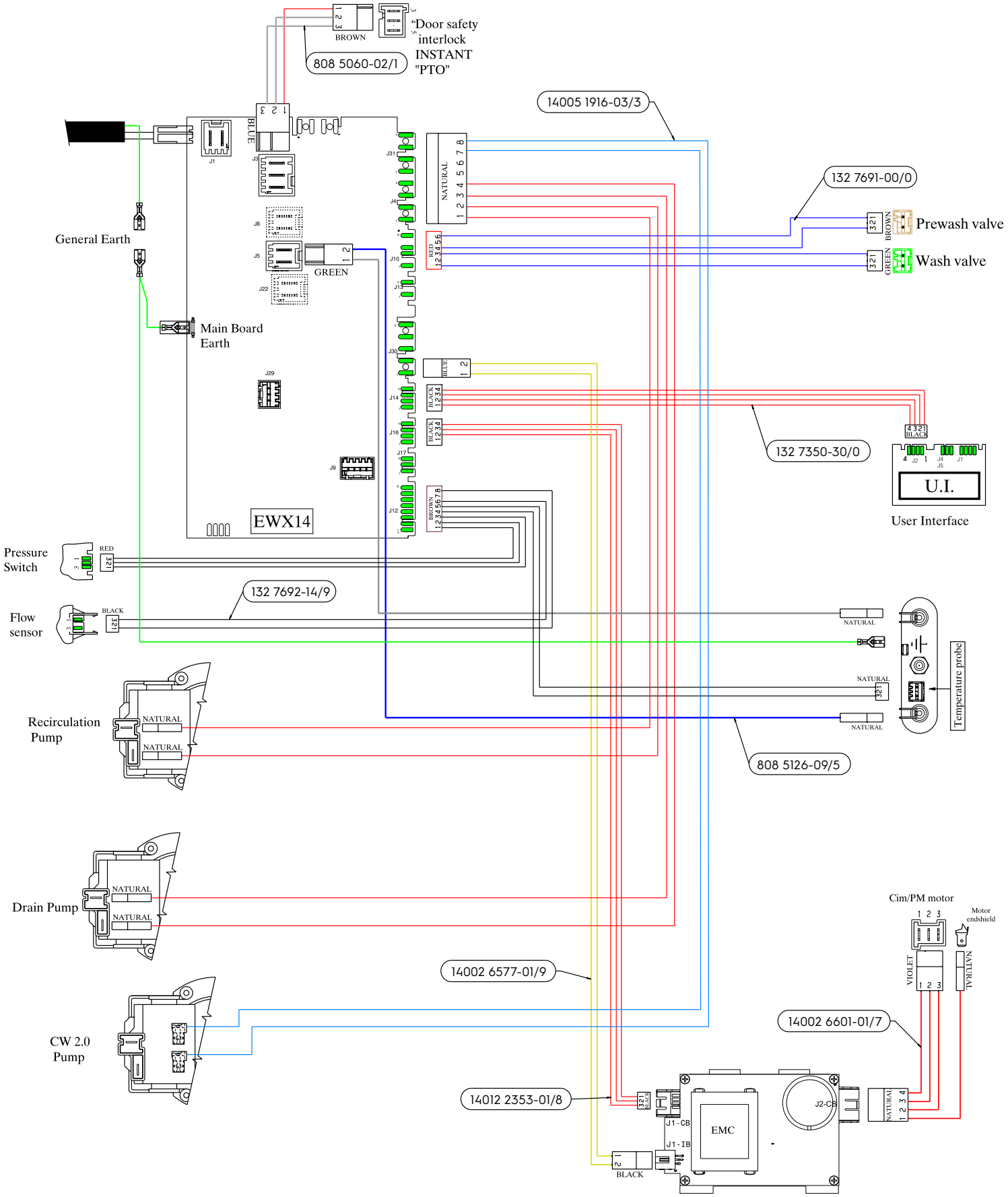
A02890629_B
P00ZP300005889