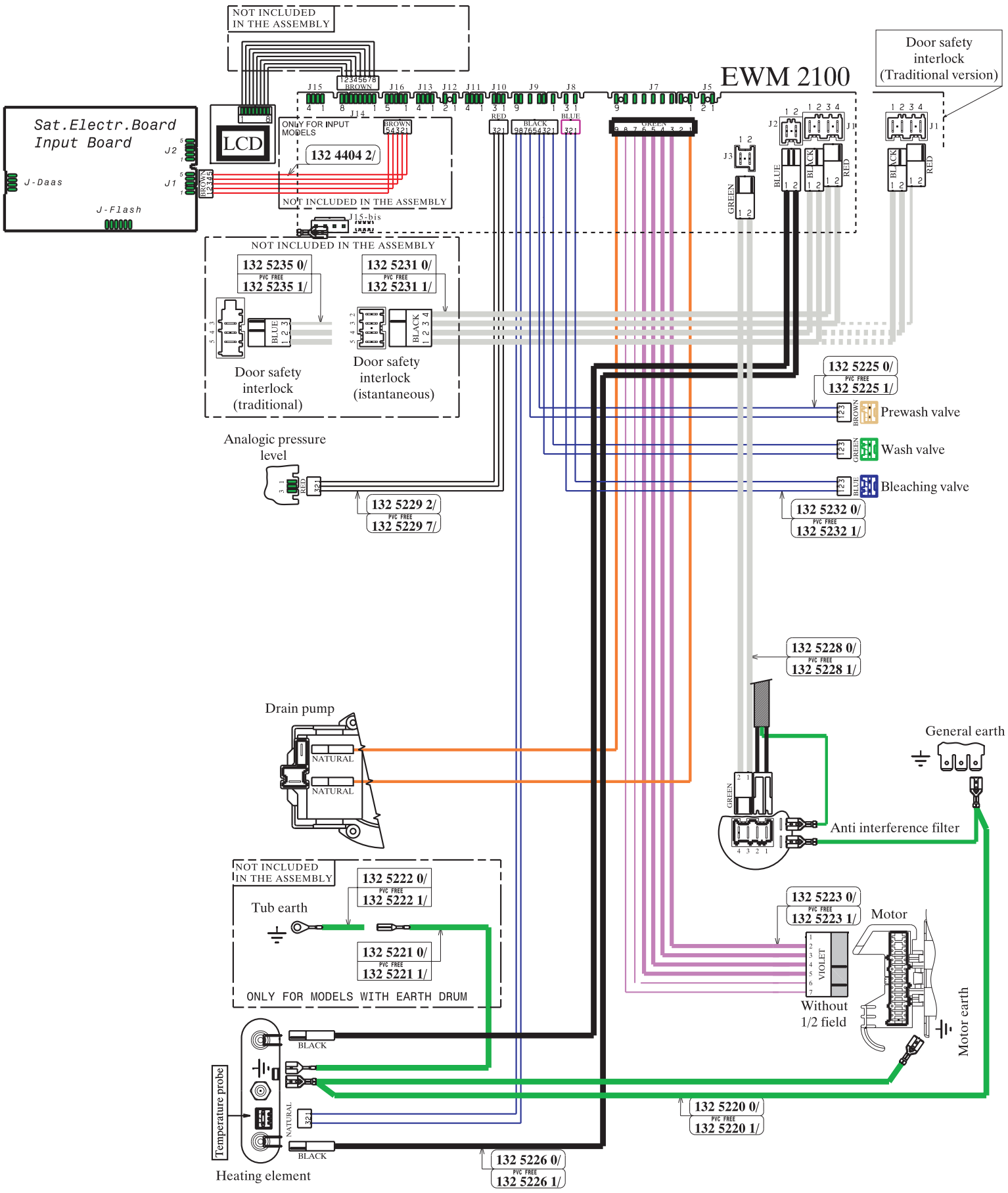
EWM 2100
NOT INCLUDED IN THE ASSEMBLY
Sat.Electr.Board
Input Board
J-Daas
J-Flash
LCD
ONLY FOR INPUT MODELS
132 4404 2/
NOT INCLUDED IN THE ASSEMBLY
J15-bis
NOT INCLUDED IN THE ASSEMBLY
132 5235 0/
PVC FREE
132 5235 1/
132 5231 0/
PVC FREE
132 5231 1/
Door safety interlock (traditional)
Door safety interlock (istantaneous)
Door safety interlock (Traditional version)
132 5225 0/
PVC FREE
132 5225 1/
Prewash valve
Wash valve
Bleaching valve
132 5232 0/
PVC FREE
132 5232 1/
Analogic pressure level
132 5229 2/
PVC FREE
132 5229 7/
132 5228 0/
PVC FREE
132 5228 1/
Drain pump
NATURAL
NATURAL
General earth
Anti interference filter
NOT INCLUDED IN THE ASSEMBLY
132 5222 0/
PVC FREE
132 5222 1/
Tub earth
132 5221 0/
PVC FREE
132 5221 1/
ONLY FOR MODELS WITH EARTH DRUM
132 5223 0/
PVC FREE
132 5223 1/
Motor
Without 1/2 field
Motor earth
Temperature probe
Heating element
132 5220 0/
PVC FREE
132 5220 1/
132 5226 0/
PVC FREE
132 5226 1/

132521175b