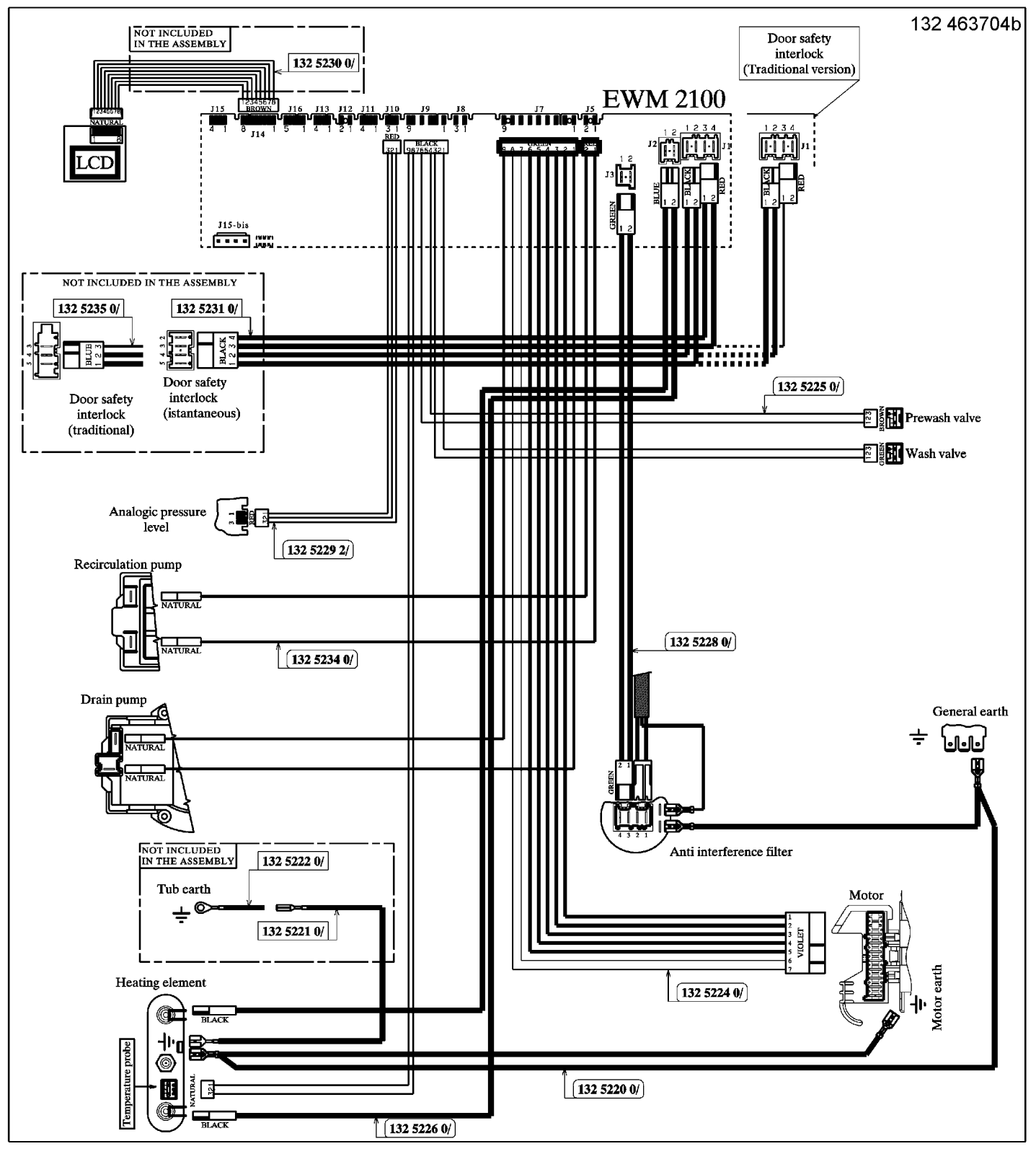
NOT INCLUDED IN THE ASSEMBLY
132 5230 0/
LCD
EWM 2100
Door safety interlock (Traditional version)
J15
J16
J13
J12
J11
J10
J9
J8
J7
J5
J14
J2
J3
J1
J15-bis
NOT INCLUDED IN THE ASSEMBLY
132 5235 0/
132 5231 0/
Door safety interlock (traditional)
Door safety interlock (istantaneous)
132 5225 0/
Prewash valve
Wash valve
Analogic pressure level
132 5229 2/
Recirculation pump
NATURAL
132 5234 0/
132 5228 0/
Drain pump
General earth
Anti interference filter
NOT INCLUDED IN THE ASSEMBLY
132 5222 0/
Tub earth
132 5221 0/
Motor
132 5224 0/
Motor earth
Heating element
Temperature probe
132 5220 0/
132 5226 0/