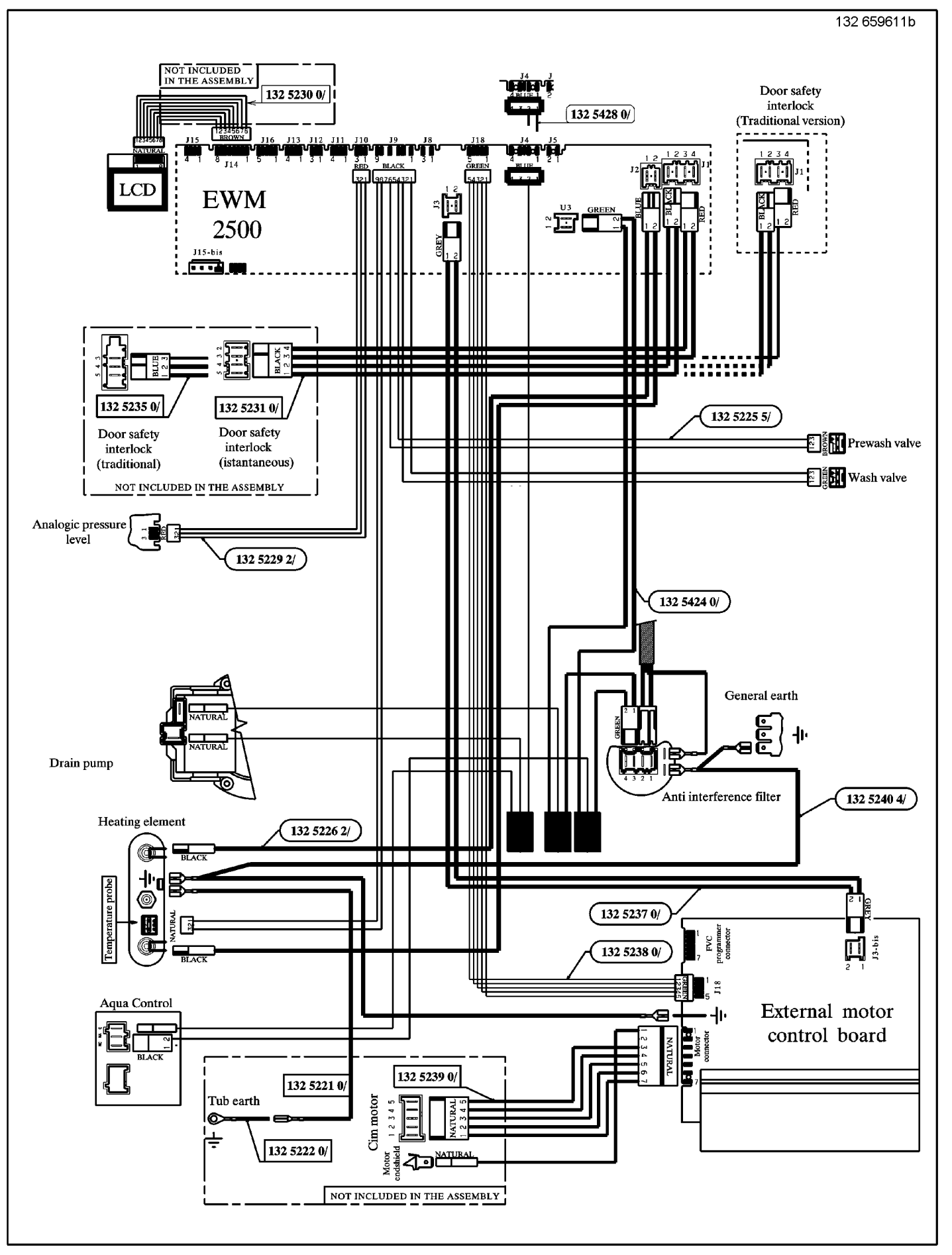
NOT INCLUDED IN THE ASSEMBLY
132 5230 0/
132 5428 0/
Door safety interlock (Traditional version)
LCD
EWM 2500
J15
J16
J13
J12
J11
J10
J9
J8
J18
J4
J5
J14
J15-bis
J3
J2
J1
U3
GREY
GREEN
BLUE
BLACK
RED
NATURAL
BROWN
132 5235 0/
132 5231 0/
Door safety interlock (traditional)
Door safety interlock (istantaneous)
NOT INCLUDED IN THE ASSEMBLY
132 5225 5/
Prewash valve
Wash valve
Analogic pressure level
132 5229 2/
132 5424 0/
General earth
Anti interference filter
132 5240 4/
Drain pump
Heating element
132 5226 2/
Temperature probe
132 5237 0/
132 5238 0/
FVC programmer connector
J3-bis
J18
Aqua Control
External motor control board
Motor connector
132 5221 0/
132 5239 0/
Tub earth
132 5222 0/
Cim motor
Motor endshield
NOT INCLUDED IN THE ASSEMBLY