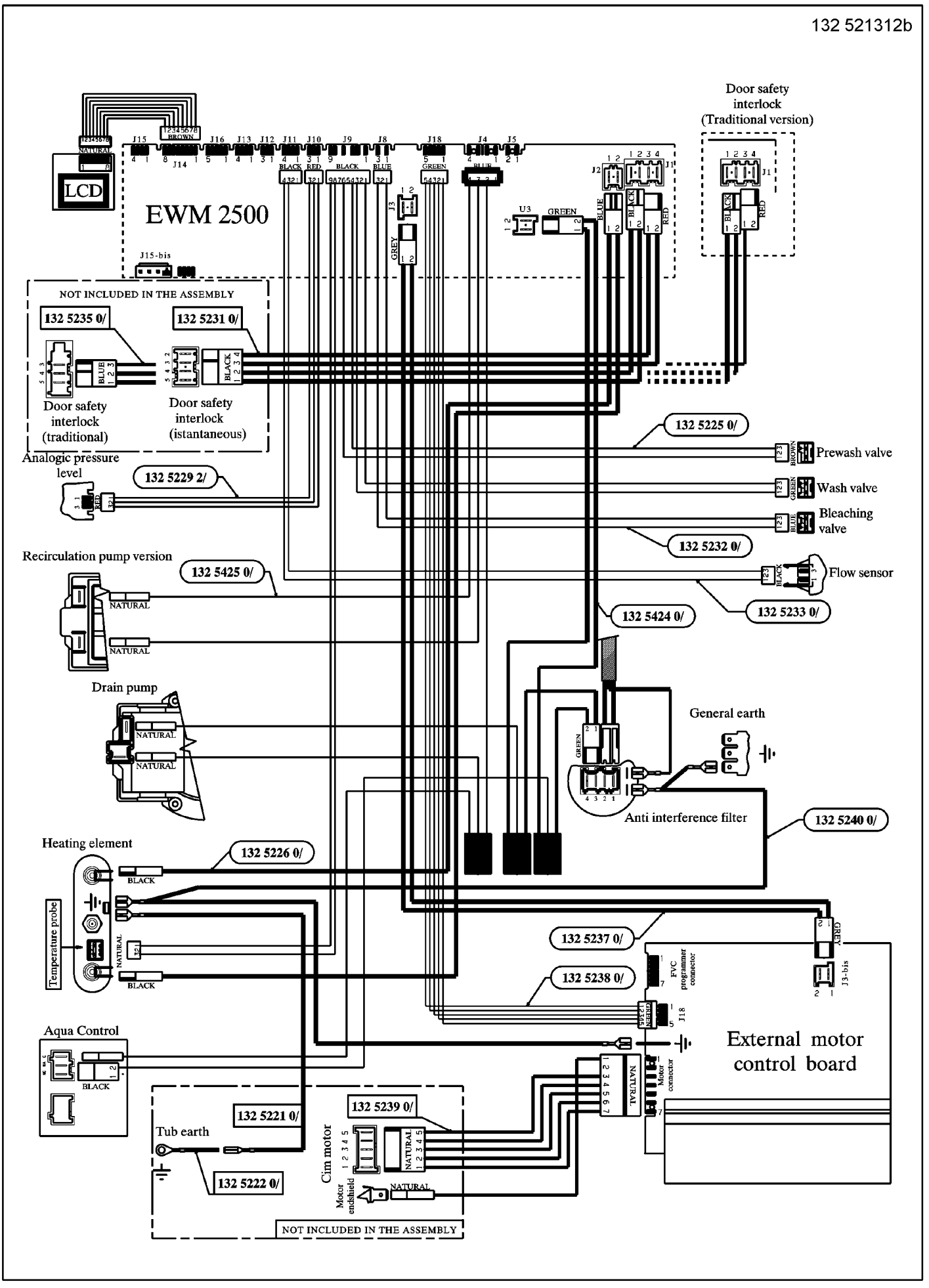
EWM 2500
LCD
J15
J16
J13
J12
J11
J10
J9
J8
J18
J4
J5
J14
J15-bis
J3
U3
GREY
GREEN
BLACK
RED
BLUE
NATURAL
BROWN
Door safety interlock (Traditional version)
NOT INCLUDED IN THE ASSEMBLY
132 5235 0/
132 5231 0/
Door safety interlock (traditional)
Door safety interlock (istantaneous)
Analogic pressure level
132 5229 2/
132 5225 0/
Prewash valve
Wash valve
Bleaching valve
132 5232 0/
Flow sensor
132 5233 0/
Recirculation pump version
132 5425 0/
132 5424 0/
Drain pump
General earth
Anti interference filter
132 5240 0/
Heating element
132 5226 0/
Temperature probe
132 5237 0/
132 5238 0/
FVC programmer connector
J13-bis
J18
Aqua Control
External motor control board
Motor connector
132 5239 0/
132 5221 0/
Tub earth
Cim motor
Motor endshield
132 5222 0/
NOT INCLUDED IN THE ASSEMBLY