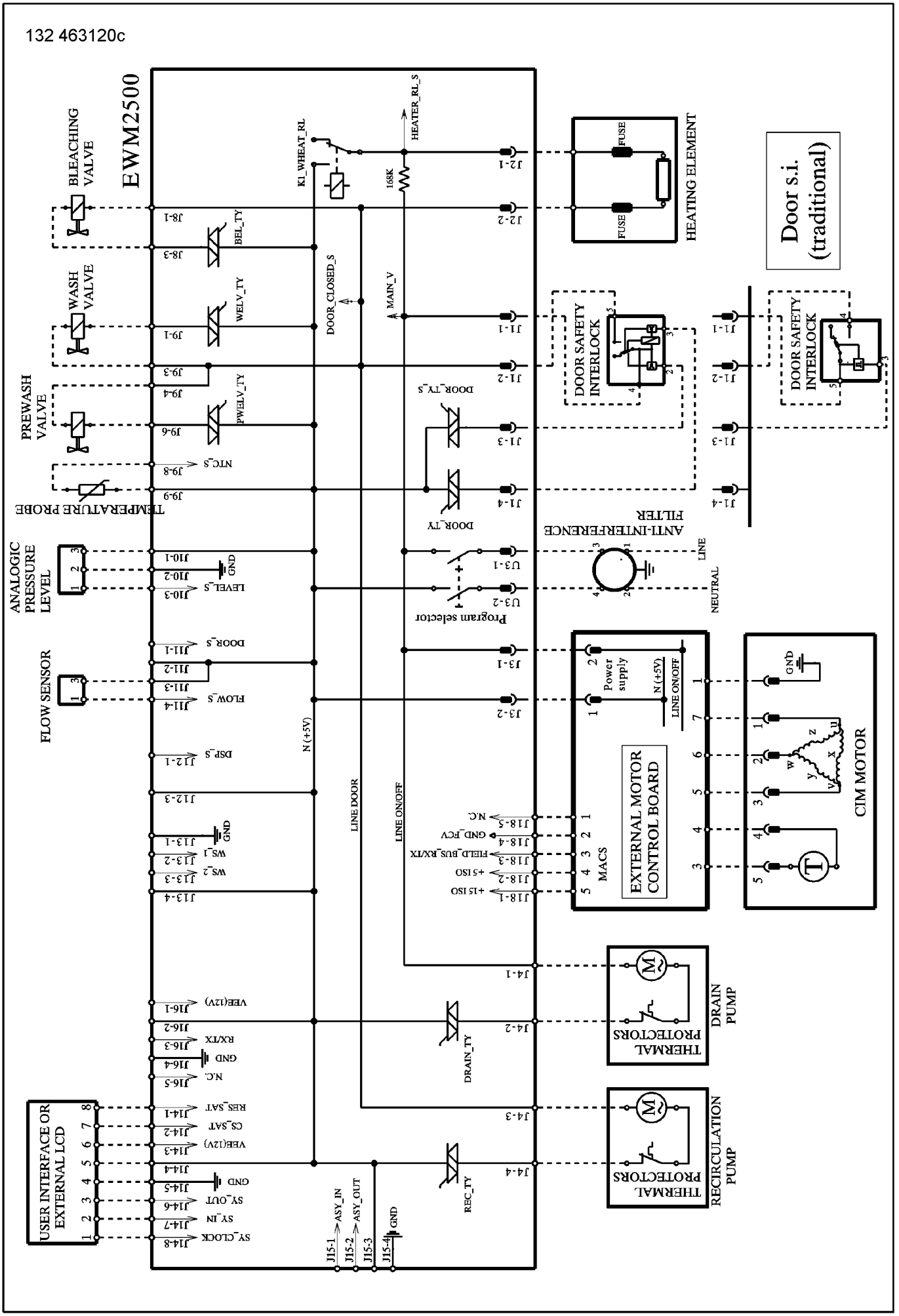
EWM2500
BLEACHING VALVE
WASH VALVE
PREWASH VALVE
TEMPERATURE PROBE
ANALOGIC PRESSURE LEVEL
FLOW SENSOR
USER INTERFACE OR EXTERNAL LCD
K1_WHEAT_RL
HEATER_RL_S
168K
HEATING ELEMENT
FUSE
Door s.i. (traditional)
DOOR SAFETY INTERLOCK
DOOR_CLOSED_S
MAIN_V
BEL_TY
WELV_TY
PWELV_TY
NTC_S
LEVEL_S
DOOR_S
FLOW_S
DSP_S
WS_1
WS_2
VEE(12V)
RX/TX
N.C.
GND
RES_SAT
CS_SAT
SY_OUT
SY_IN
SY_CLOCK
ASY_IN
ASY_OUT
DOOR_TY_S
DOOR_TY
Program selector
ANTI-INTERFERENCE FILTER
LINE
NEUTRAL
N (+5V)
LINE DOOR
LINE ON/OFF
Power supply
N (+5V)
LINE ON/OFF
EXTERNAL MOTOR CONTROL BOARD
MACS
+15 ISO
+5 ISO
FIELD_BUS_RX/TX
GND_FCV
N.C.
CIM MOTOR
GND
DRAIN_TY
REC_TY
THERMAL PROTECTORS
DRAIN PUMP
RECIRCULATION PUMP