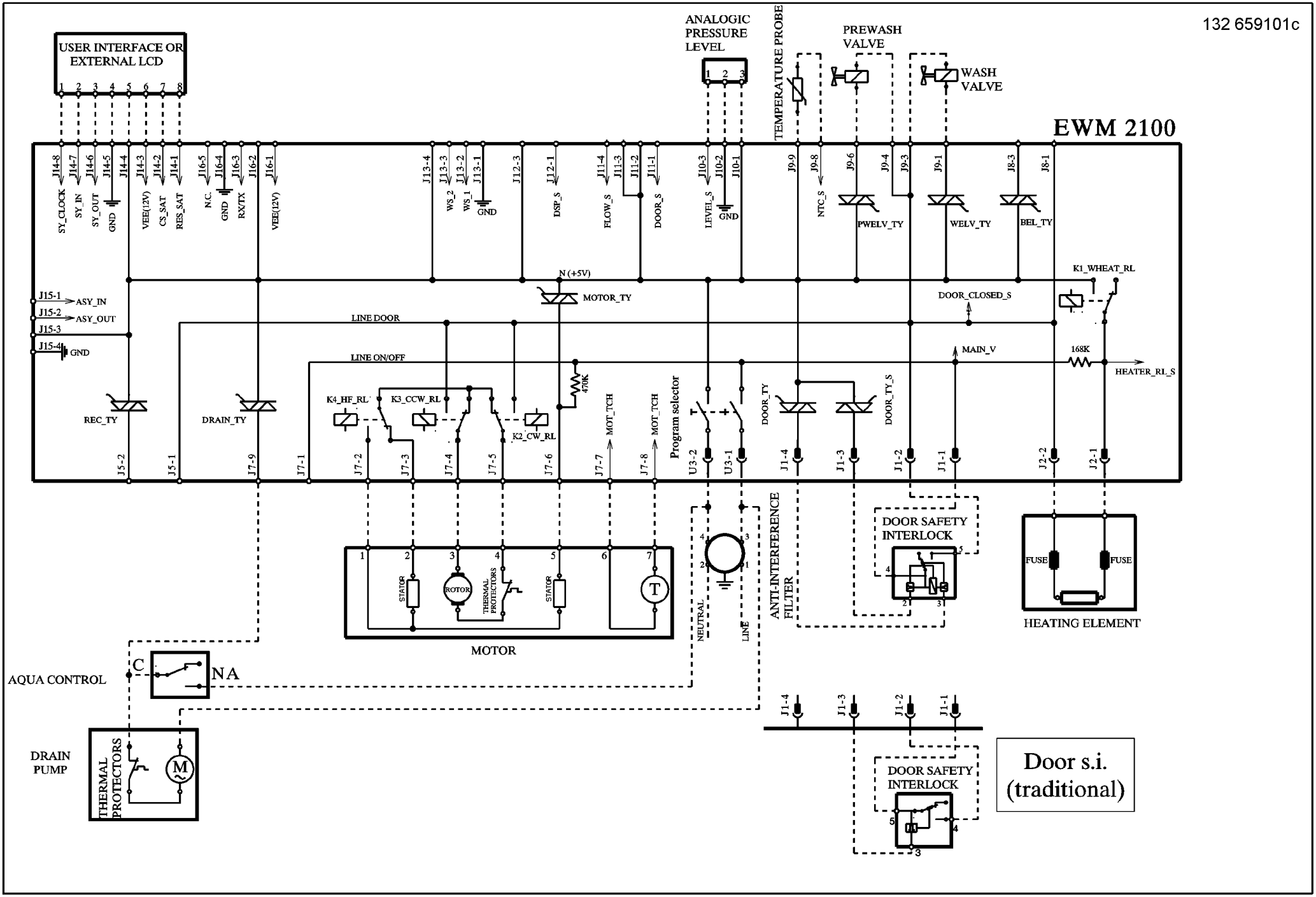
132 659101c
EWM 2100
USER INTERFACE OR EXTERNAL LCD
ANALOGIC PRESSURE LEVEL
TEMPERATURE PROBE
PREWASH VALVE
WASH VALVE
SY_CLOCK
SY_IN
SY_OUT
GND
VEE(12V)
CS_SAT
RES_SAT
N.C.
RX/TX
WS_2
WS_1
DSP_S
FLOW_S
DOOR_S
LEVEL_S
NTC_S
PWELV_TY
WELV_TY
BEL_TY
K1_WHEAT_RL
N (+5V)
MOTOR_TY
DOOR_CLOSED_S
ASY_IN
ASY_OUT
LINE DOOR
LINE ON/OFF
MAIN_V
168K
HEATER_RL_S
470K
REC_TY
DRAIN_TY
K4_HF_RL
K3_CCW_RL
K2_CW_RL
MOT_TCH
Program selector
DOOR_TY
DOOR_TY_S
STATOR
ROTOR
THERMAL PROTECTORS
T
MOTOR
NEUTRAL
LINE
ANTI-INTERFERENCE FILTER
DOOR SAFETY INTERLOCK
FUSE
HEATING ELEMENT
AQUA CONTROL
C
NA
DRAIN PUMP
M
Door s.i. (traditional)