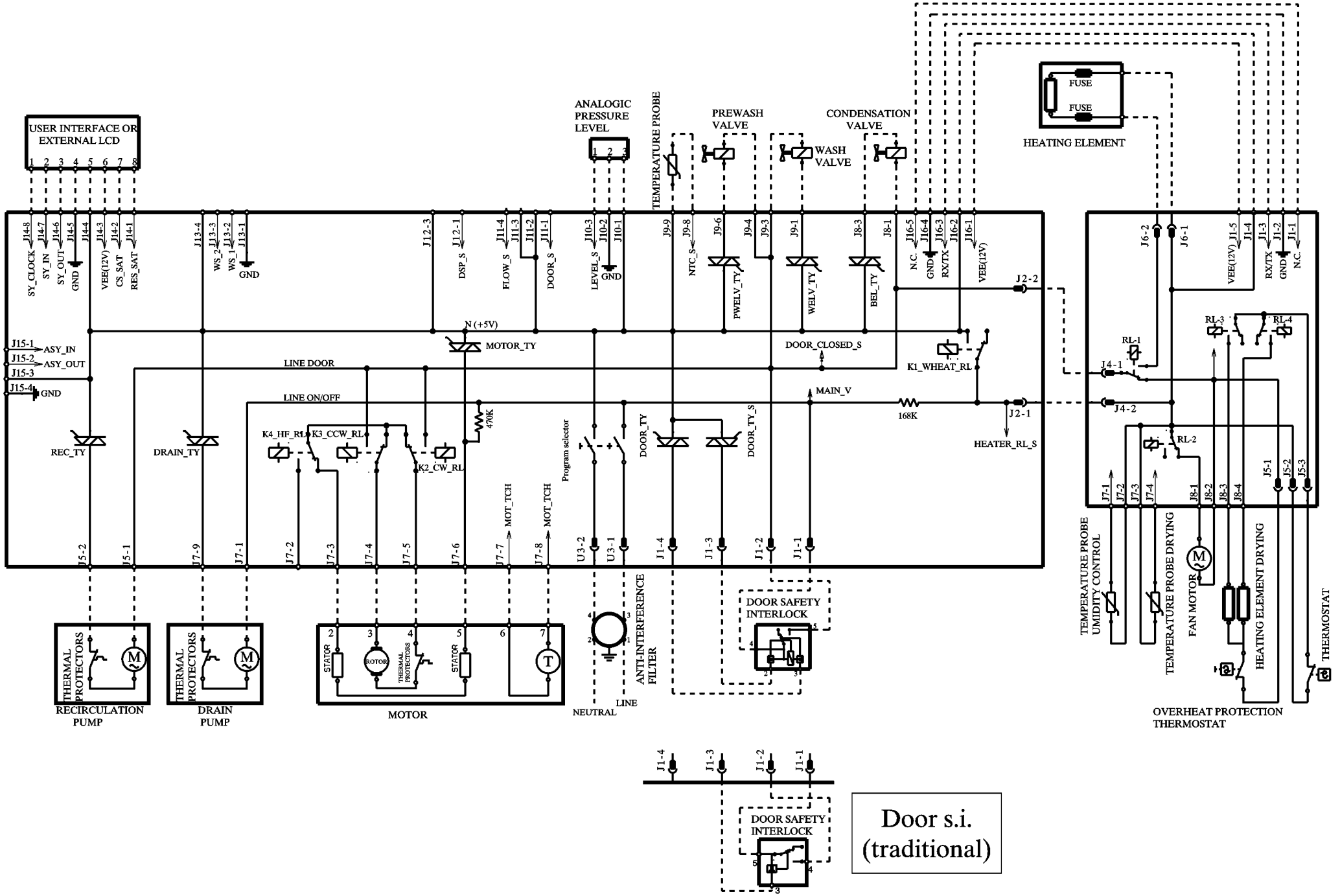
USER INTERFACE OR EXTERNAL LCD
ANALOGIC PRESSURE LEVEL
TEMPERATURE PROBE
PREWASH VALVE
WASH VALVE
CONDENSATION VALVE
FUSE
FUSE
HEATING ELEMENT
SY_CLOCK
SY_IN
SY_OUT
GND
VEE(12V)
CS_SAT
RES_SAT
WS_2
WS_1
DSP_S
FLOW_S
DOOR_S
LEVEL_S
NTC_S
PWELV_TY
WELV_TY
BEL_TY
N.C.
RX/TX
J15-1 ASY_IN
J15-2 ASY_OUT
J15-3
J15-4 GND
N (+5V)
MOTOR_TY
LINE DOOR
LINE ON/OFF
DOOR_CLOSED_S
K1_WHEAT_RL
MAIN_V
168K
HEATER_RL_S
470K
REC_TY
DRAIN_TY
K4_HF_RL
K3_CCW_RL
K2_CW_RL
Program selector
MOT_TCH
DOOR_TY
DOOR_TY_S
RL-1
RL-2
RL-3
RL-4
THERMAL PROTECTORS
RECIRCULATION PUMP
DRAIN PUMP
STATOR
ROTOR
MOTOR
NEUTRAL
LINE
ANTI-INTERFERENCE FILTER
DOOR SAFETY INTERLOCK
TEMPERATURE PROBE UMIDITY CONTROL
TEMPERATURE PROBE DRYING
FAN MOTOR
HEATING ELEMENT DRYING
THERMOSTAT
OVERHEAT PROTECTION THERMOSTAT
Door s.i. (traditional)