132 463801b

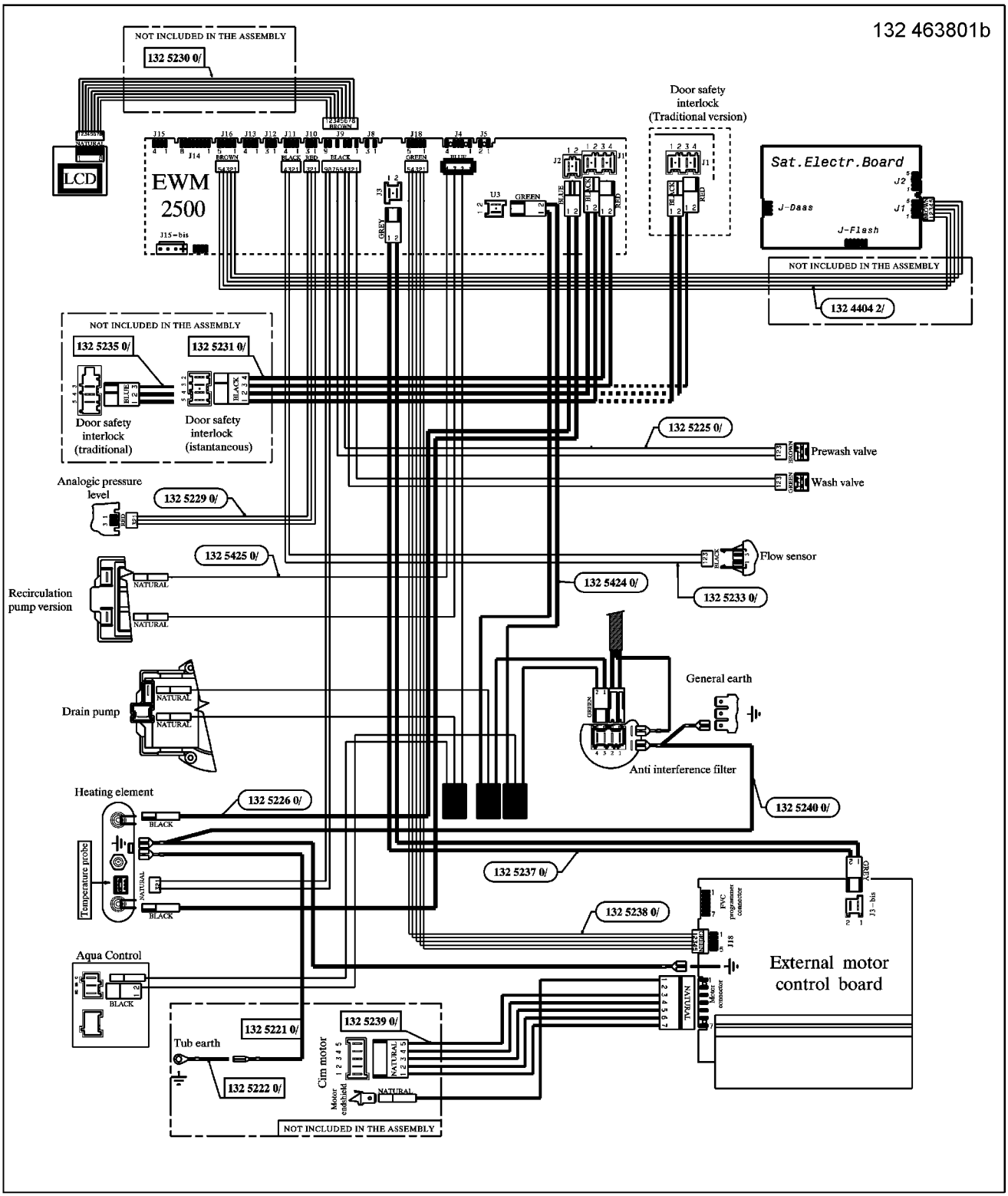
NOT INCLUDED IN THE ASSEMBLY
132 5230 0/
LCD
EWM 2500
J15-bis
Door safety interlock (Traditional version)
Sat.Electr.Board
J-Daas
J-Flash
NOT INCLUDED IN THE ASSEMBLY
132 4404 2/
NOT INCLUDED IN THE ASSEMBLY
132 5235 0/
132 5231 0/
Door safety interlock (traditional)
Door safety interlock (istantaneous)
132 5225 0/
Prewash valve
Wash valve
Analogic pressure level
132 5229 0/
132 5425 0/
Flow sensor
132 5424 0/
132 5233 0/
Recirculation pump version
Drain pump
General earth
Anti interference filter
Heating element
132 5226 0/
132 5240 0/
Temperature probe
132 5237 0/
132 5238 0/
Aqua Control
External motor control board
132 5221 0/
132 5239 0/
Tub earth
Cim motor
132 5222 0/
NOT INCLUDED IN THE ASSEMBLY