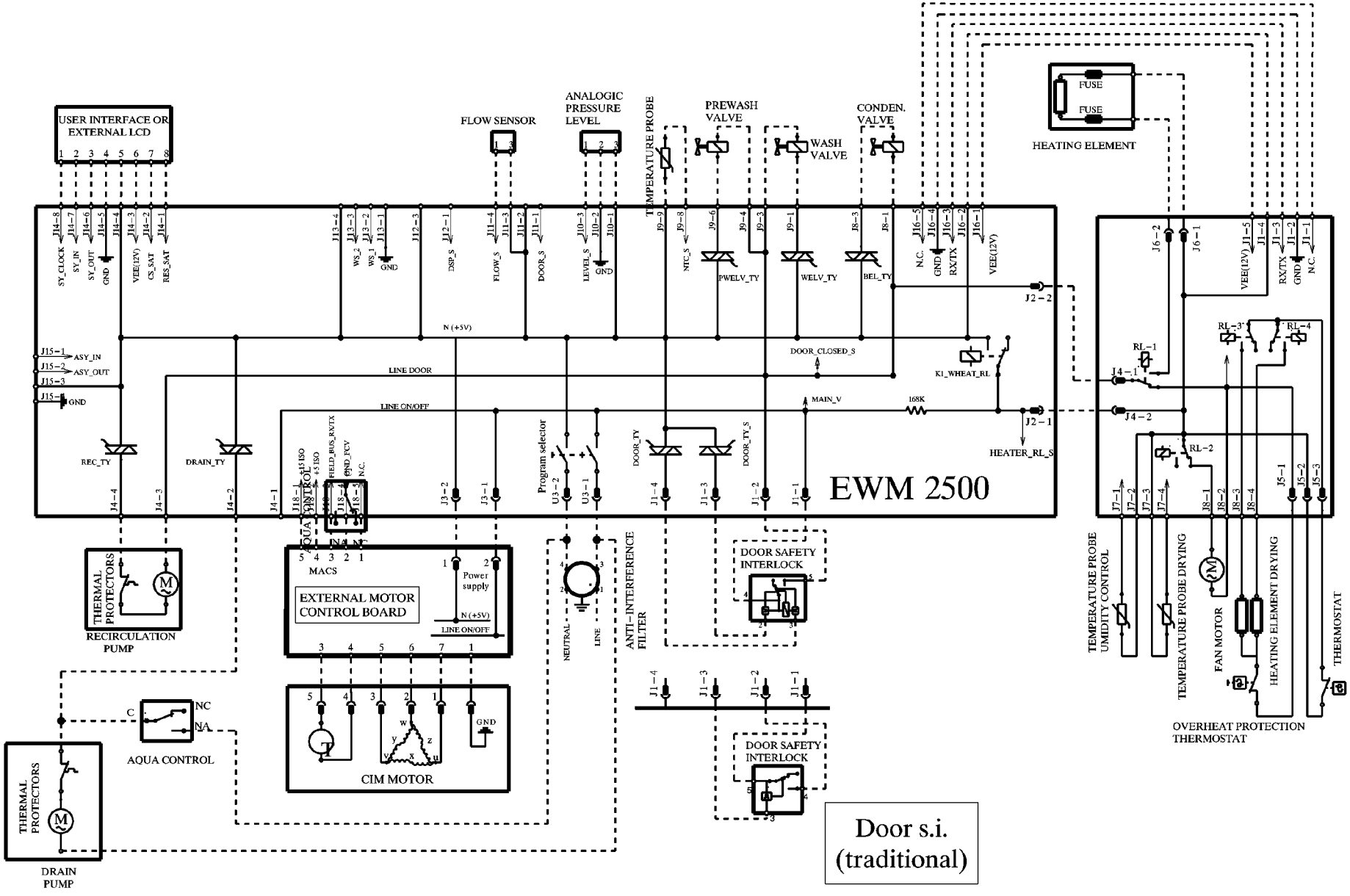

Door s.i.
(traditional)