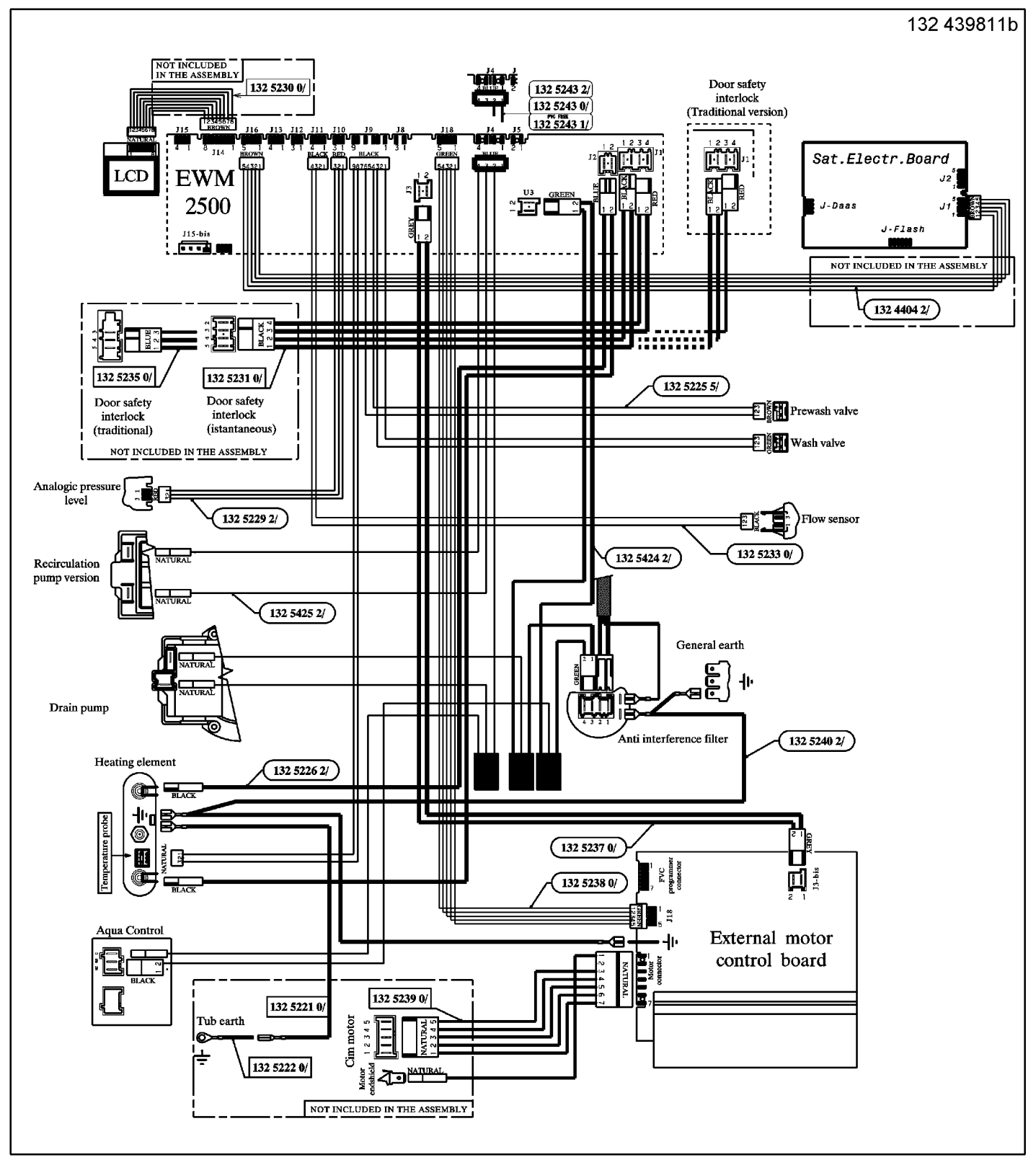
NOT INCLUDED IN THE ASSEMBLY
132 5230 0/
LCD
EWM 2500
J15-bis
132 5243 2/
132 5243 0/
132 5243 1/
Door safety interlock (Traditional version)
Sat.Electr.Board
J-Daas
J-Flash
NOT INCLUDED IN THE ASSEMBLY
132 4404 2/
132 5235 0/
132 5231 0/
Door safety interlock (traditional)
Door safety interlock (istantaneous)
NOT INCLUDED IN THE ASSEMBLY
132 5225 5/
Prewash valve
Wash valve
Analogic pressure level
132 5229 2/
Flow sensor
132 5233 0/
132 5424 2/
Recirculation pump version
132 5425 2/
Drain pump
General earth
Anti interference filter
132 5240 2/
Heating element
132 5226 2/
Temperature probe
132 5237 0/
132 5238 0/
FVC programmer connector
J18
J3-bis
Aqua Control
External motor control board
Motor connector
132 5221 0/
132 5239 0/
Tub earth
132 5222 0/
Cim motor
Motor cutshield
NOT INCLUDED IN THE ASSEMBLY