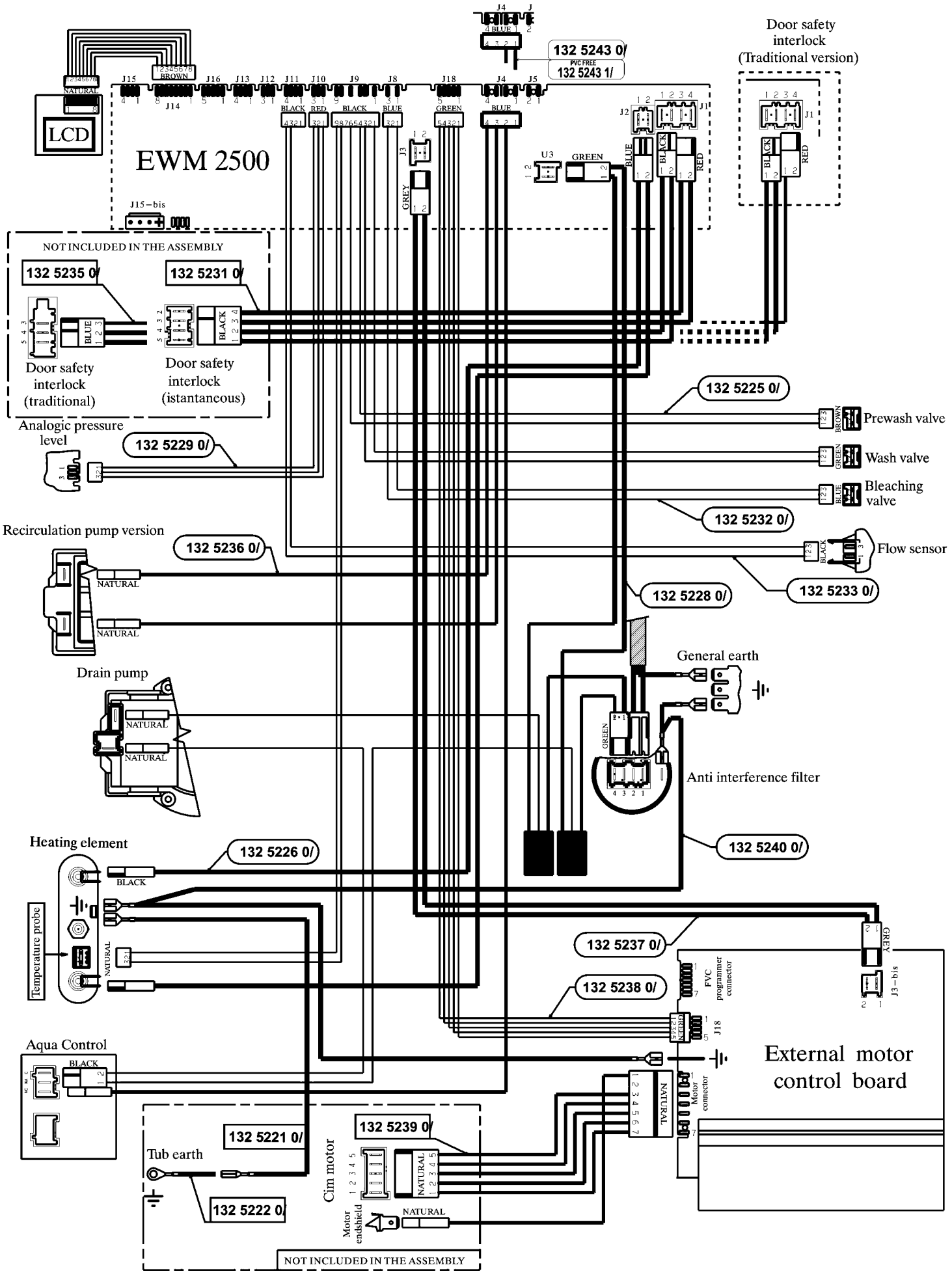
EWM 2500
LCD
NATURAL
J15
J14
J16
J13
J12
J11
J10
J9
J8
J18
J4
J5
J3
J2
J1
U3
J15-bis
BROWN
BLACK
RED
BLUE
GREEN
GREY
J4
J
PVC FREE
132 5243 0/
132 5243 1/
Door safety interlock (Traditional version)
NOT INCLUDED IN THE ASSEMBLY
132 5235 0/
132 5231 0/
Door safety interlock (traditional)
Door safety interlock (istantaneous)
Analogic pressure level
132 5229 0/
132 5225 0/
Prewash valve
Wash valve
Bleaching valve
132 5232 0/
Flow sensor
132 5233 0/
Recirculation pump version
132 5236 0/
132 5228 0/
Drain pump
General earth
Anti interference filter
132 5240 0/
Heating element
132 5226 0/
Temperature probe
132 5237 0/
132 5238 0/
FVC programmer connector
J3-bis
J18
External motor control board
Motor connector
Aqua Control
132 5221 0/
132 5239 0/
Tub earth
Cim motor
132 5222 0/
Motor endshield
NOT INCLUDED IN THE ASSEMBLY