124 911473c

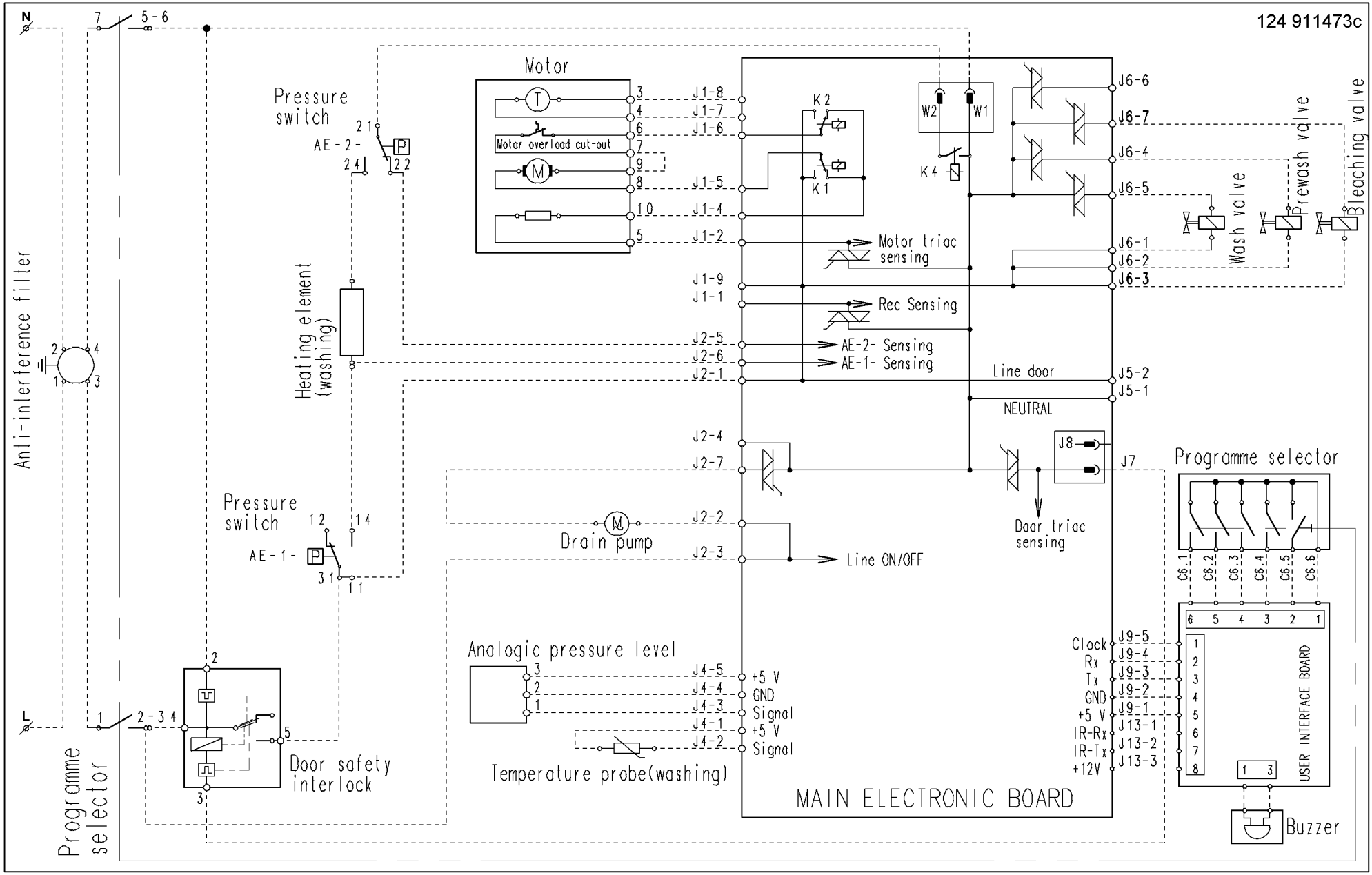
N
L
Anti-interference filter
Programme selector
Pressure switch
AE-2-
Pressure switch
AE-1-
Heating element (washing)
Motor
Motor overload cut-out
Door safety interlock
Drain pump
Analogic pressure level
Temperature probe(washing)
J1-8
J1-7
J1-6
J1-5
J1-4
J1-2
J1-9
J1-1
J2-5
J2-6
J2-1
J2-4
J2-7
J2-2
J2-3
+5 V
GND
Signal
+5 V
Signal
K2
K1
K4
W2
W1
Motor triac sensing
Rec Sensing
AE-2- Sensing
AE-1- Sensing
Line ON/OFF
Line door
NEUTRAL
Door triac sensing
J8
J7
J6-6
J6-7
J6-4
J6-5
J6-1
J6-2
J6-3
J5-2
J5-1
Wash valve
Prewash valve
Bleaching valve
Programme selector
C6.1
C6.2
C6.3
C6.4
C6.5
C6.6
Clock
Rx
Tx
GND
+5 V
IR-Rx
IR-Tx
+12V
J9-5
J9-4
J9-3
J9-2
J9-1
J13-1
J13-2
J13-3
USER INTERFACE BOARD
Buzzer
MAIN ELECTRONIC BOARD