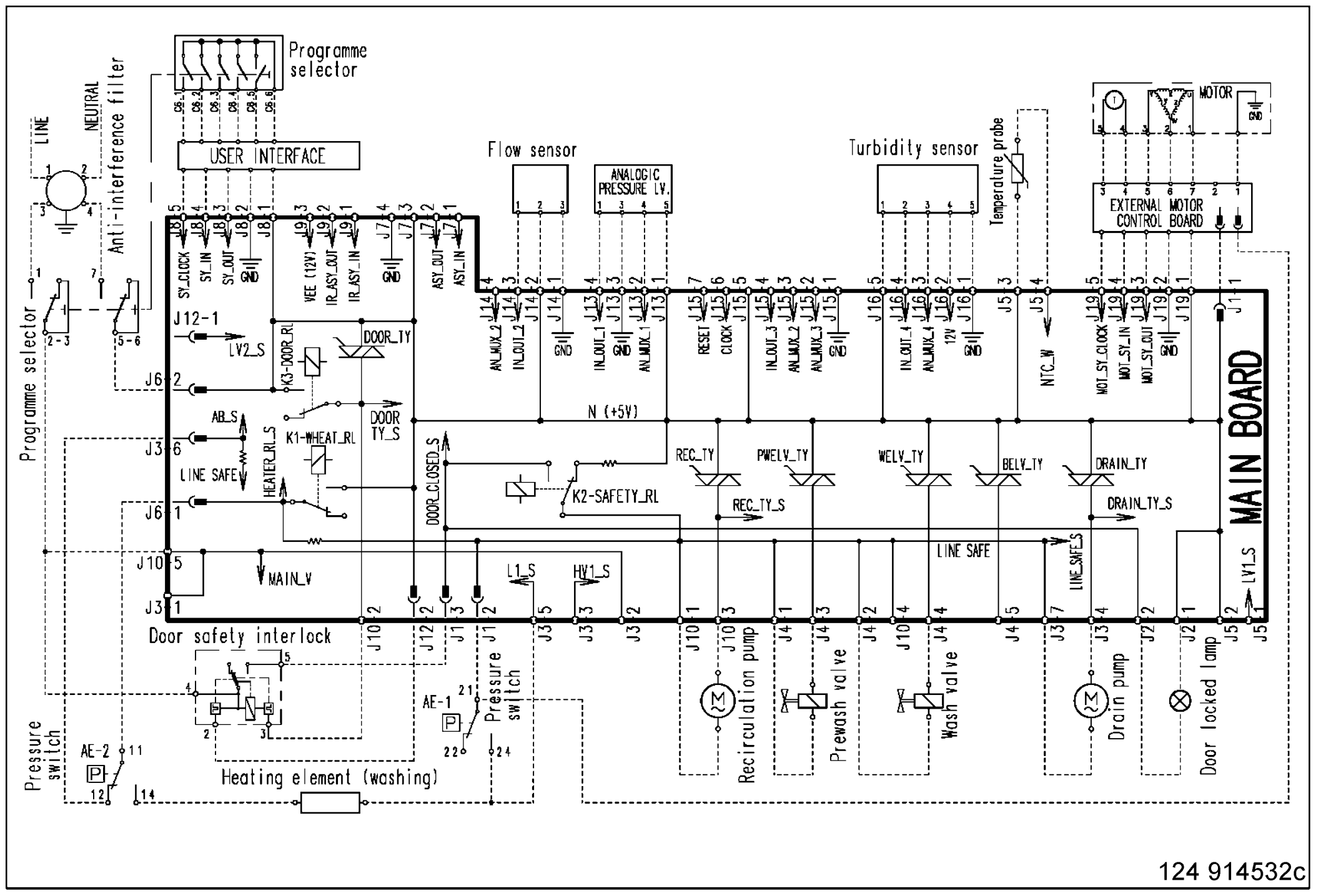
Programme selector
USER INTERFACE
LINE
NEUTRAL
Anti-interference filter
Programme selector
Flow sensor
ANALOGIC PRESSURE LV.
Turbidity sensor
Temperature probe
MOTOR
EXTERNAL MOTOR CONTROL BOARD
MAIN BOARD
SY_CLOCK
SY_IN
SY_OUT
GND
VEE (12V)
IR_ASY_OUT
IR_ASY_IN
ASY_OUT
ASY_IN
AN_MUX_2
IN_OUT_2
IN_OUT_1
AN_MUX_1
RESET
CLOCK
IN_OUT_3
AN_MUX_3
IN_OUT_4
AN_MUX_4
12V
NTC_W
MOT_SY_CLOCK
MOT_SY_IN
MOT_SY_OUT
J12-1
LV2_S
K3-DOOR_RL
DOOR_TY
J6-2
AB_S
DOOR TY_S
K1-WHEAT_RL
J3-6
LINE SAFE
HEATER_RL_S
J6-1
DOOR_CLOSED_S
K2-SAFETY_RL
N (+5V)
REC_TY
PWELV_TY
WELV_TY
BELV_TY
DRAIN_TY
REC_TY_S
DRAIN_TY_S
LINE SAFE
LINE_SAFE_S
J10-5
MAIN_V
L1_S
HV1_S
LV1_S
J3-1
Door safety interlock
Pressure switch
AE-1
AE-2
Heating element (washing)
Recirculation pump
Prewash valve
Wash valve
Drain pump
Door locked lamp

124 914532c