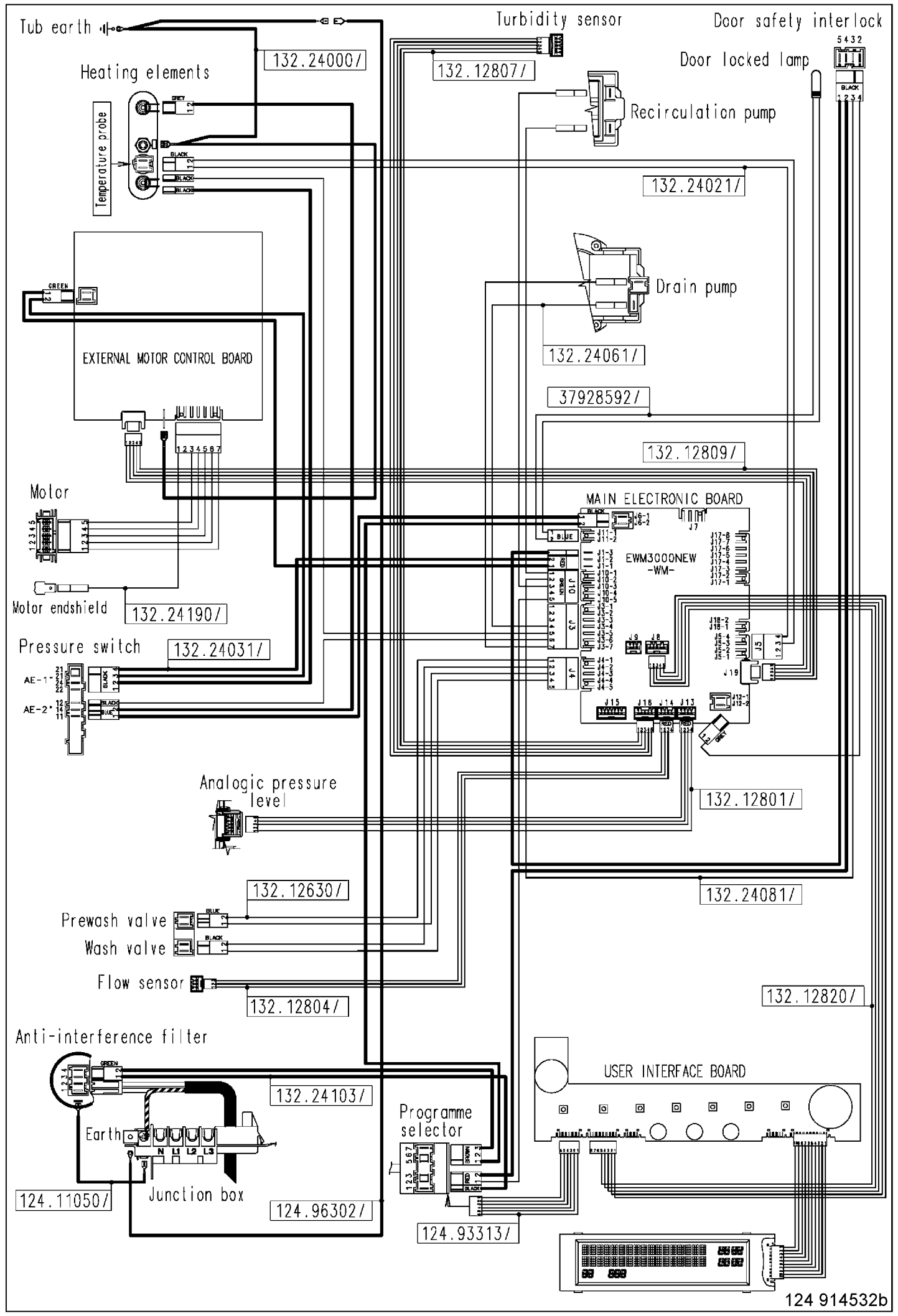
Tub earth
132.24000/
Heating elements
Temperature probe
Turbidity sensor
132.12807/
Door safety interlock
Door locked lamp
Recirculation pump
132.24021/
Drain pump
132.24061/
37928592/
132.12809/
EXTERNAL MOTOR CONTROL BOARD
Motor
Motor endshield
132.24190/
Pressure switch
132.24031/
AE-1*
AE-2*
MAIN ELECTRONIC BOARD
EWM3000NEW
-WM-
Analogic pressure level
132.12801/
132.12630/
132.24081/
Prewash valve
Wash valve
Flow sensor
132.12804/
132.12820/
Anti-interference filter
132.24103/
Earth
Junction box
124.11050/
124.96302/
Programme selector
124.93313/
USER INTERFACE BOARD
124 914532b