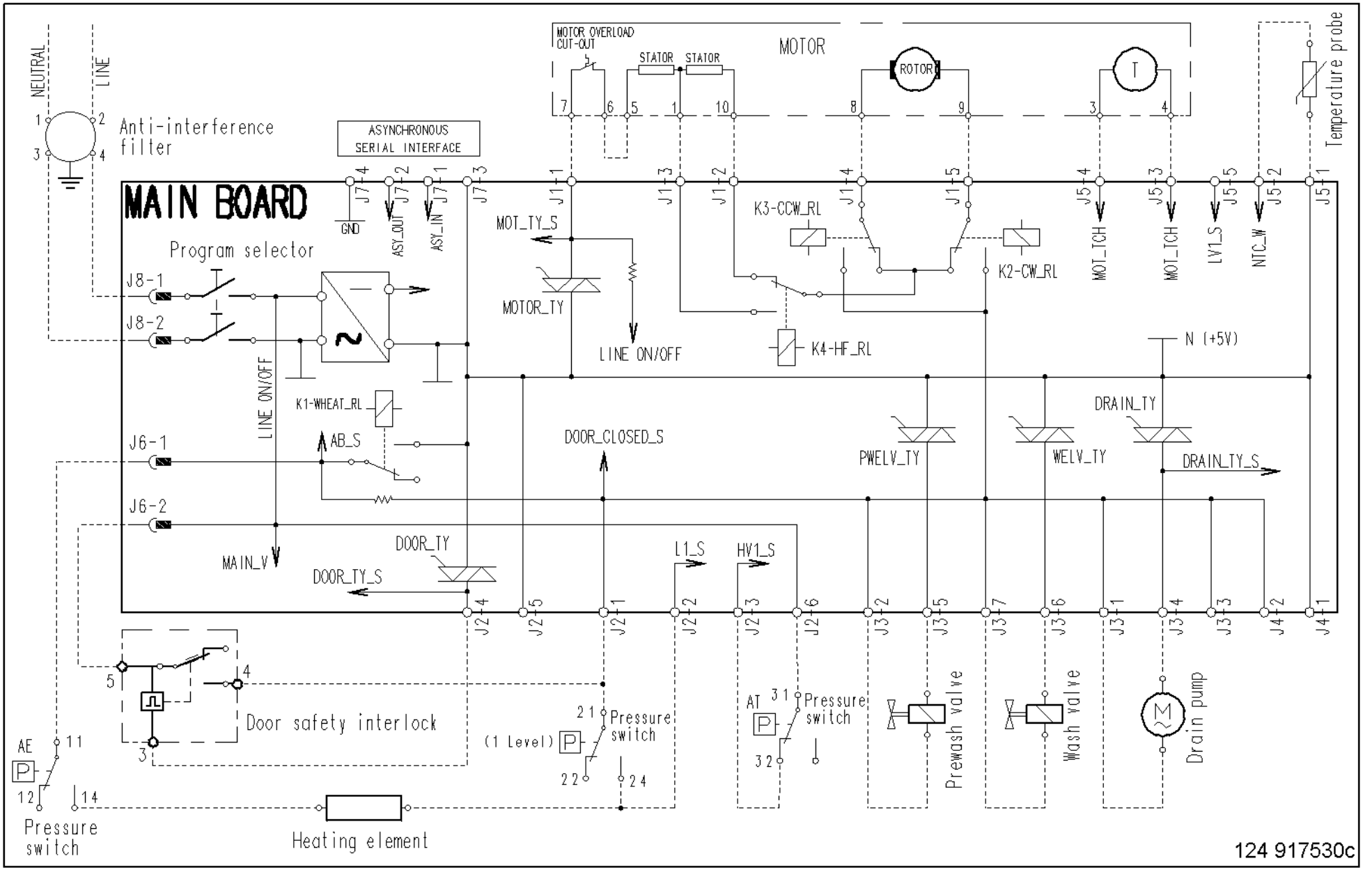
MAIN BOARD
NEUTRAL
LINE
Anti-interference filter
ASYNCHRONOUS SERIAL INTERFACE
GND
ASY_OUT
ASY_IN
MOTOR OVERLOAD CUT-OUT
STATOR
STATOR
MOTOR
ROTOR
T
Temperature probe
Program selector
J8-1
J8-2
LINE ON/OFF
K1-WHEAT_RL
AB_S
J6-1
J6-2
MAIN_V
DOOR_TY
DOOR_TY_S
MOT_TY_S
MOTOR_TY
LINE ON/OFF
K3-CCW_RL
K2-CW_RL
K4-HF_RL
DOOR_CLOSED_S
L1_S
HV1_S
MOT_TCH
MOT_TCH
LV1_S
NTC_W
N (+5V)
DRAIN_TY
PWELV_TY
WELV_TY
DRAIN_TY_S
Door safety interlock
AE
Pressure switch
Heating element
(1 Level)
Pressure switch
AT
Pressure switch
Prewash valve
Wash valve
Drain pump
124 917530c