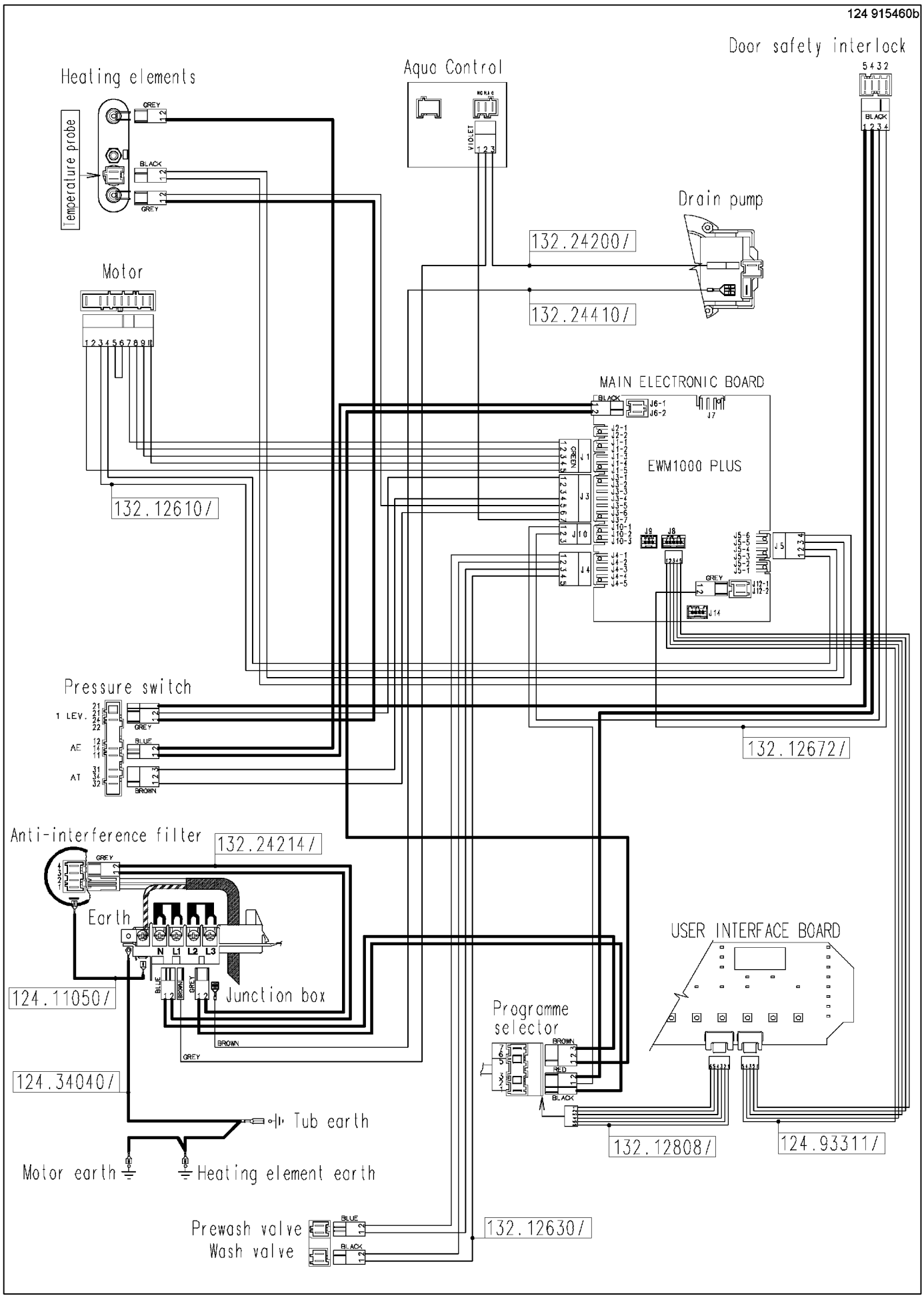
Door safety interlock
Heating elements
Temperature probe
GREY
BLACK
GREY
Aquo Control
VIOLET
Drain pump
132.24200/
132.24410/
Motor
MAIN ELECTRONIC BOARD
EWM1000 PLUS
132.12610/
Pressure switch
1 LEV.
AE
AT
GREY
BLUE
BROWN
132.12672/
Anti-interference filter
132.24214/
Earth
N L1 L2 L3
Junction box
124.11050/
124.34040/
USER INTERFACE BOARD
Programme selector
BROWN
RED
BLACK
132.12808/
124.93311/
Tub earth
Motor earth
Heating element earth
Prewash valve
Wash valve
BLUE
BLACK
132.12630/