124 876354c

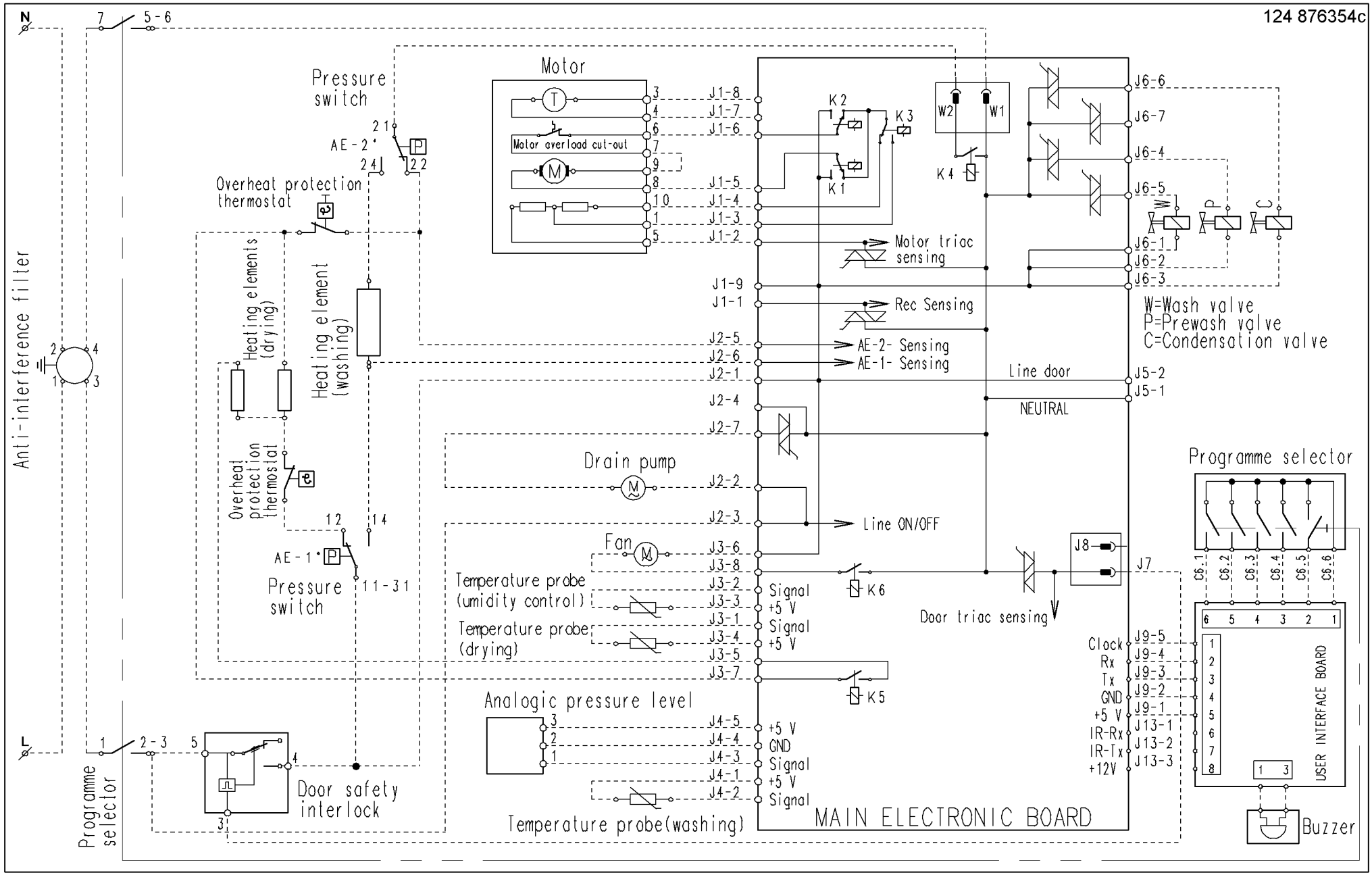
N
L
Anti-interference filter
Programme selector
Pressure switch
AE-2
Overheat protection thermostat
Heating elements (drying)
Heating element (washing)
Overheat protection thermostat
AE-1
Pressure switch
Door safety interlock
Motor
Motor overload cut-out
Drain pump
Fan
Temperature probe (umidity control)
Temperature probe (drying)
Analogic pressure level
Temperature probe(washing)
Motor triac sensing
Rec Sensing
AE-2- Sensing
AE-1- Sensing
Line door
NEUTRAL
Line ON/OFF
Door triac sensing
Signal
+5 V
GND
Clock
Rx
Tx
IR-Rx
IR-Tx
+12V
W=Wash valve
P=Prewash valve
C=Condensation valve
Programme selector
USER INTERFACE BOARD
Buzzer
MAIN ELECTRONIC BOARD