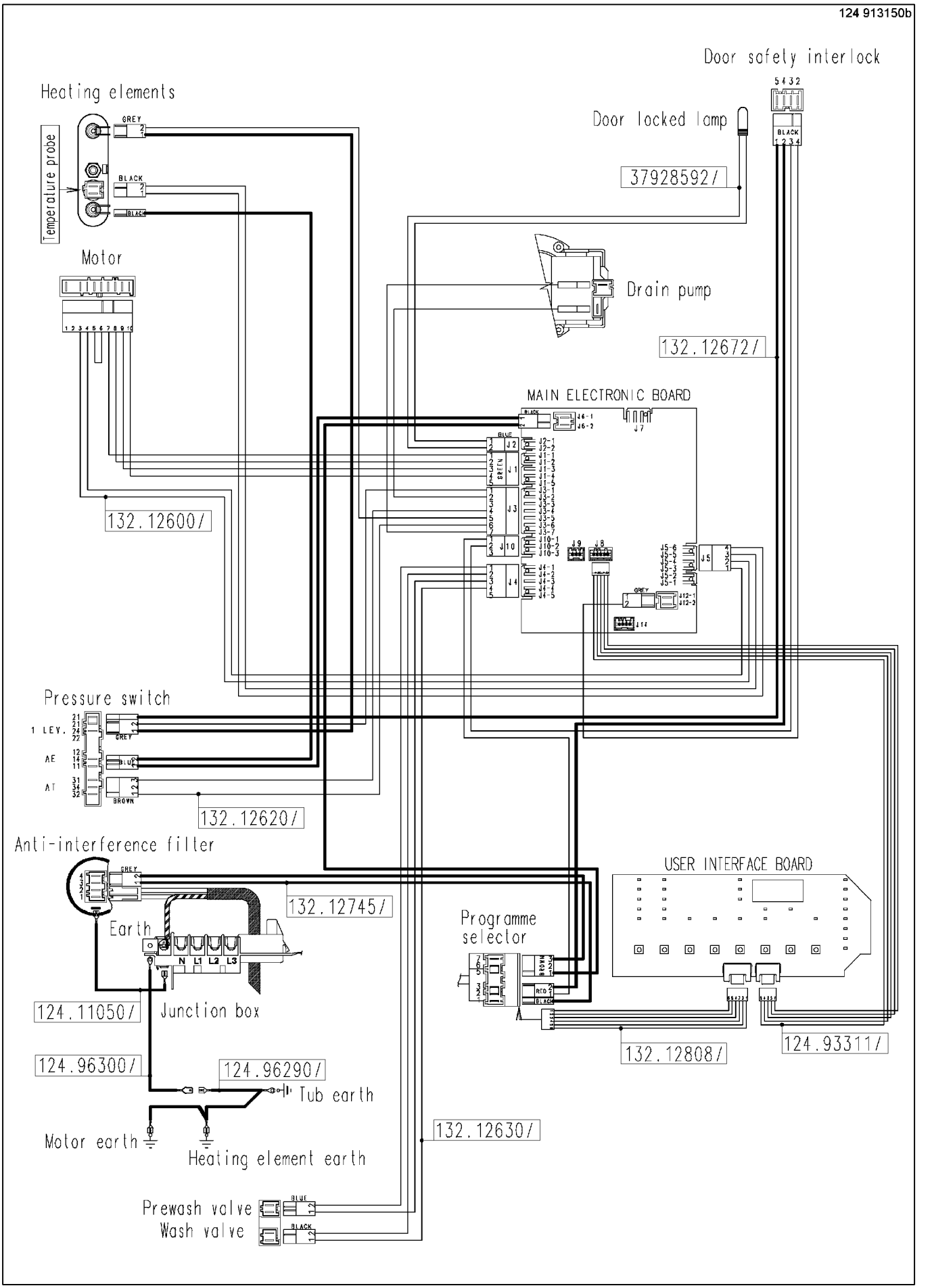
Door safety interlock
Heating elements
Temperature probe
GREY
BLACK
Door locked lamp
37928592/
Motor
Drain pump
132.12672/
MAIN ELECTRONIC BOARD
132.12600/
Pressure switch
1 LEV.
AE
AT
132.12620/
Anti-interference filter
132.12745/
Earth
N L1 L2 L3
Junction box
124.11050/
USER INTERFACE BOARD
Programme selector
132.12808/
124.93311/
124.96300/
124.96290/
Tub earth
Motor earth
Heating element earth
132.12630/
Prewash valve
Wash valve