124 878392c

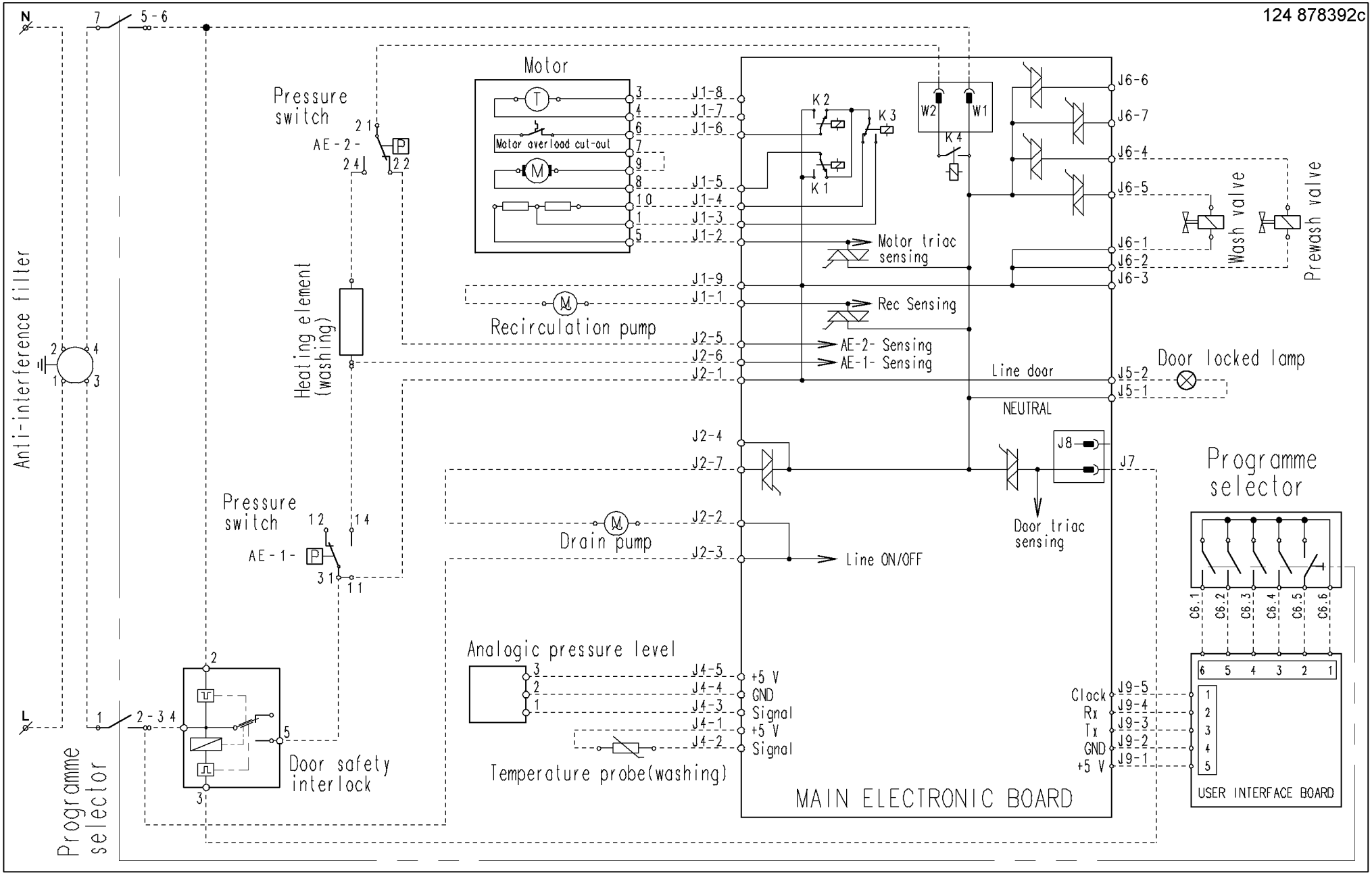
N
L
Anti-interference filter
Programme selector
Pressure switch
AE-2-
Pressure switch
AE-1-
Heating element (washing)
Motor
Motor overload cut-out
Recirculation pump
Drain pump
Analogic pressure level
Temperature probe(washing)
Door safety interlock
Motor triac sensing
Rec Sensing
AE-2- Sensing
AE-1- Sensing
Line door
NEUTRAL
Door triac sensing
Line ON/OFF
Wash valve
Prewash valve
Door locked lamp
Programme selector
Clock
Rx
Tx
GND
+5 V
+5 V
GND
Signal
+5 V
Signal
MAIN ELECTRONIC BOARD
USER INTERFACE BOARD